NOTES
■ FOR COMPLETE DESIGN AND PRODUCT INFORMATION CONTACT JENSEN PRECAST.

BILL OF MATERIALS

ITEM	UNIT QTY	QTY	PART NUMBER	DESCRIPTION
1	1.377 ft^3	1.377 ft^3	100011426	CONCRETE MIX GENERIC 5500 PSI
2	1	1	200027130	WIRE LOOP 67MB/PB BODY & EXT

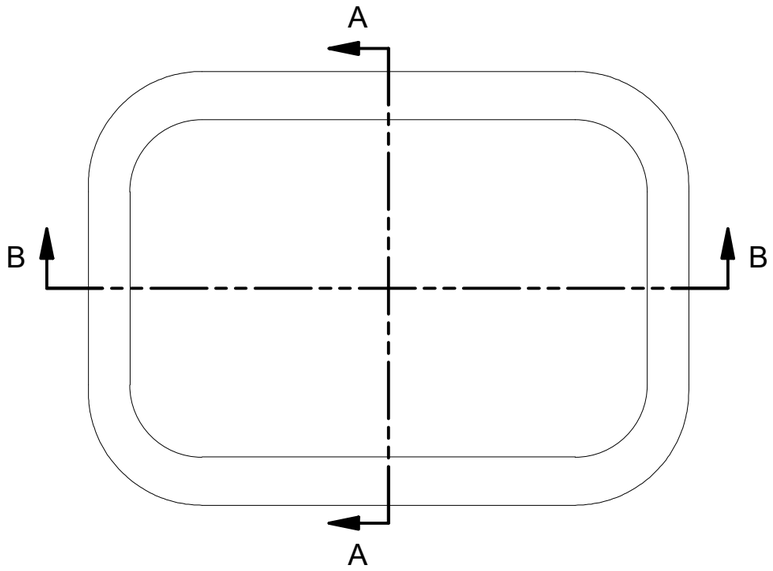

PLAN VIEW

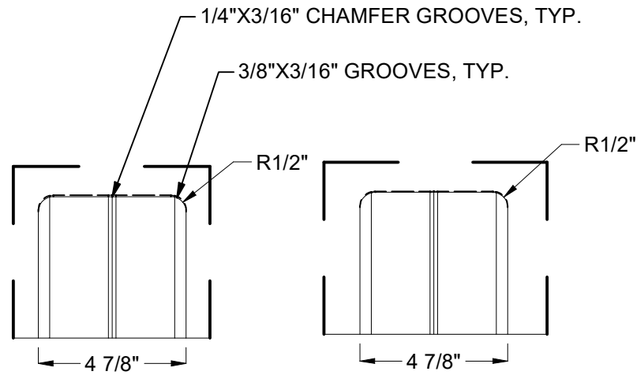

DETAIL A1

DETAIL B1

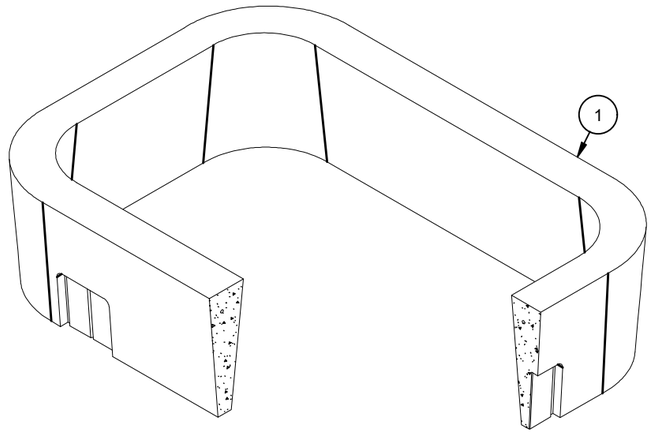

ISO BREAKOUT VIEW

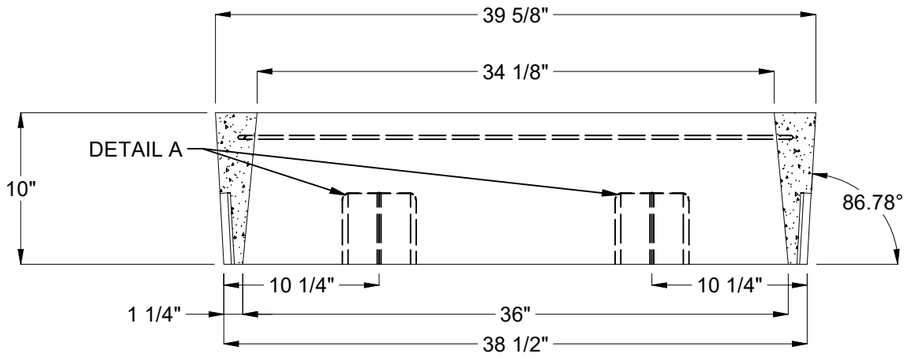

SECTION B-B
(HIDDEN LINES SHOWN FOR CLARITY)

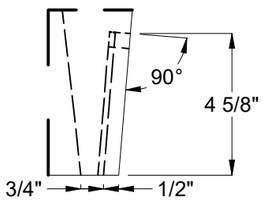

DETAIL A2

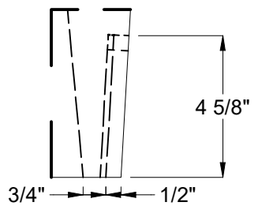

DETAIL B2

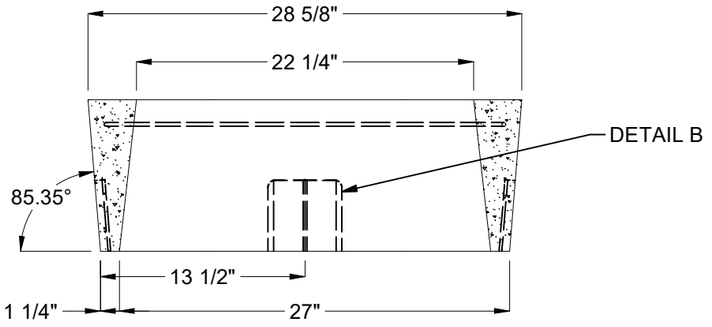

SECTION A-A
(HIDDEN LINES SHOWN FOR CLARITY)

CHANGE HISTORY			
NO.	DESCRIPTION	DATE	BY
1	INITIAL RELEASE	8/23/2023	MB

BURY DEPTH:	0.0' - 0.0' to Top		
WATER LEVEL:	Below Structure	APPROX. WEIGHT:	207 Lbs
DESIGN SPEC:	ASTM C857	LOADING SPEC:	A-03 (300 psf)
REINFORCEMENT TYPE:	Plain Wire	LIFTING TYPE:	None

JENSEN PRECAST EST. 1968

WWW.JENSENPRECAST.COM

©2024 Jensen Precast- All rights reserved.
All materials appearing as Jensen Precast documents and the like are proprietary work product and are protected under U.S. copyright and other laws.
Unless in conjunction with business conducted with Jensen Precast, any use of Jensen Precast work product without express, written consent is prohibited, and recipient is prohibited from distributing any and all work product to non-approved third parties under penalty of civil action.

DESCRIPTION:	HN 2436x10 Concrete Ext BASE		REV: A-8
PART NUMBER:	200072256	DRAWN BY:	M. Baumann
CREATED:	1/26/2023	MODIFIED:	8/25/2024
			SHEET: 1 OF 1

200072256.idw