DESIGN NOTES
■ DESIGNED IN ACCORDANCE WITH AASHTO HS20-44 TRAFFIC BRIDGE LOADING USING 5,500 PSI COMPRESSIVE STRENGTH CONCRETE AND 60,000 PSI YIELD STRENGTH ASTM A-706 STEEL REINFORCEMENT PER CALCS 34544.
■ MINIMUM EXCAVATION SIZE: 3'-8" X 6'-6" X DEPTH REQ'D.
■ COVER DESIGN FOR PEDESTRIAN LOADING.
■ VAULT TO BE PLACED ON A MIN. 6” BASE OF CRUSHER RUN FOR EASE OF INSTALLATION AND EVEN LOAD DISTRIBUTION.
■ ALL PARTS TO BE STENCILED: MFG DATE / JOB NUMBER / PRODUCT ID / WEIGHT.
■ FOR COMPLETE DESIGN AND PRODUCT INFORMATION CONTACT JENSEN PRECAST.

BILL OF MATERIALS

ITEM	UNIT QTY	QTY	PART NUMBER	DESCRIPTION	MASS (lbs)
1	1	1	100012129	Vault 2436x30 Rect. Bottom Section Knockout Ducted,Sump LADWP E-491 G1	2121
2	1	1	100012124	Vault 2436x6 Rect. Top Section 24"x36"C LADWP/EDISON	217
3	1	2	100012121	Riser 2436x12	559
4	1	1	100007031	COVER 2436 POLYMER MORENO VALLEY	163
5	1	4	100008105	PENTA BOLT 1/2-13 UNC 2-1/2 304SS W/CAPWASH	
6	1.000 ul	1.000 ul	100005749	SEALANT JOINT BUTYL RUBBER ASTM C-990 AND M198 CS-102 1IN EQUIV X14.5FT PER BOX 118FT	

200071012.idw

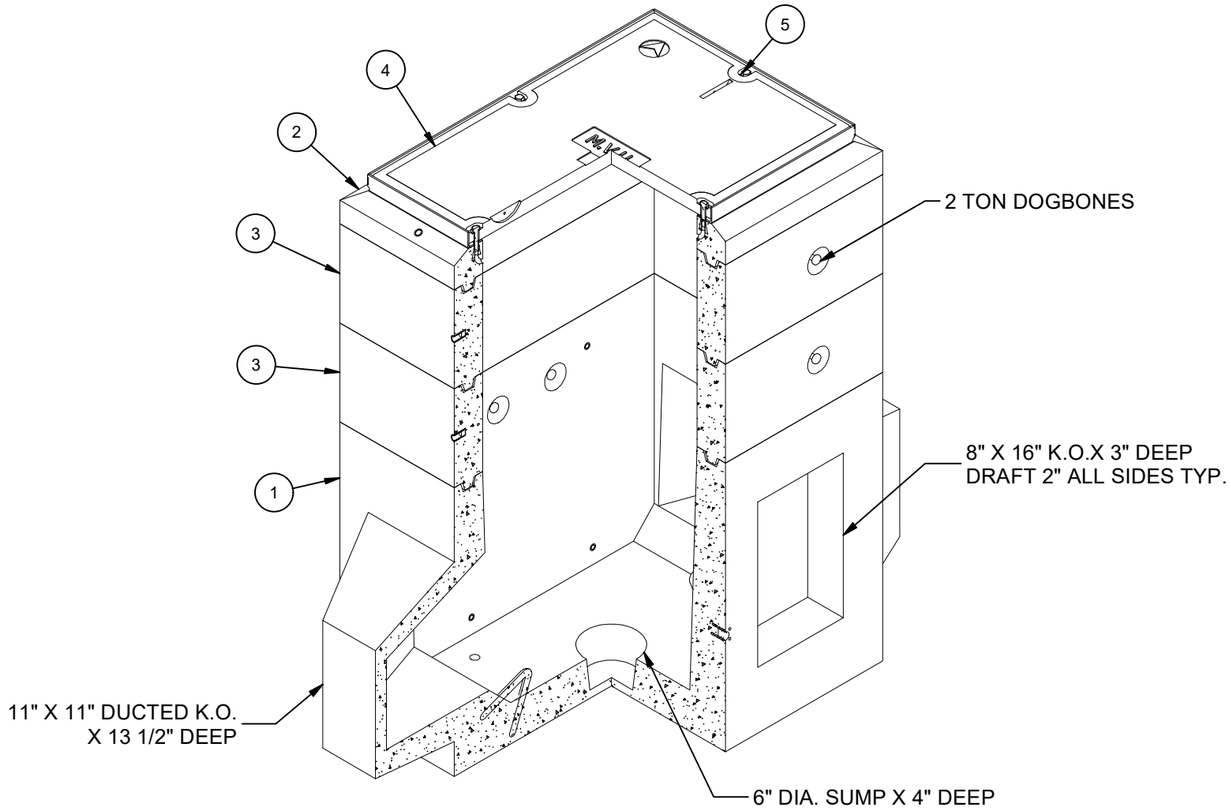

ISOMETRIC VIEW

LIFTING NOTES
■ FIELD INSTALLATION: PLANT DEMOLDING: MINIMUM HANDLING CONCRETE STRENGTH F'c = 5500 PSI RIGGING EQUALIZER REQUIRED TO EQUALIZE LOAD TO 4 LIFTING POINTS WITH A SLING ANGLE BETWEEN 60° AND 90°

REVISION HISTORY			
REV	DESCRIPTION	DATE	APPROVED
A-7	INITIAL RELEASE	1/10/2023	

BURY DEPTH:	0.0' - 0.3' to Top		
WATER LEVEL:	3.0'	APPROX. WEIGHT:	3612 Lbs
DESIGN SPEC:	ASTM C857,ACI 318	LOADING SPEC:	A-16 (AASHTO HS20-44)
AGENCY:	CITY OF MORENO VALLEY	AGENCY SPEC:	MVEU-721-0

JENSEN PRECAST EST. 1968

WWW.JENSENPRECAST.COM

©2023 Jensen Precast- All rights reserved.
All materials appearing as Jensen Precast documents and the like are proprietary work product and are protected under U.S. copyright and other laws.
Unless in conjunction with business conducted with Jensen Precast, any use of Jensen Precast work product without express, written consent is prohibited, and recipient is prohibited from distributing any and all work product to non-approved third parties under penalty of civil action.

DESCRIPTION:	Vault 2436 Layout Assembly CITY OF MORENO VALLEY MVEU-721-0 RPM PARKWAY COVER LAYOUT REVIEW		REV: A-7
PART NUMBER:	200071012	DRAWN BY:	R. Ramos
CREATED:	12/20/2022	MODIFIED:	1/11/2023
			SHEET: 1 OF 2

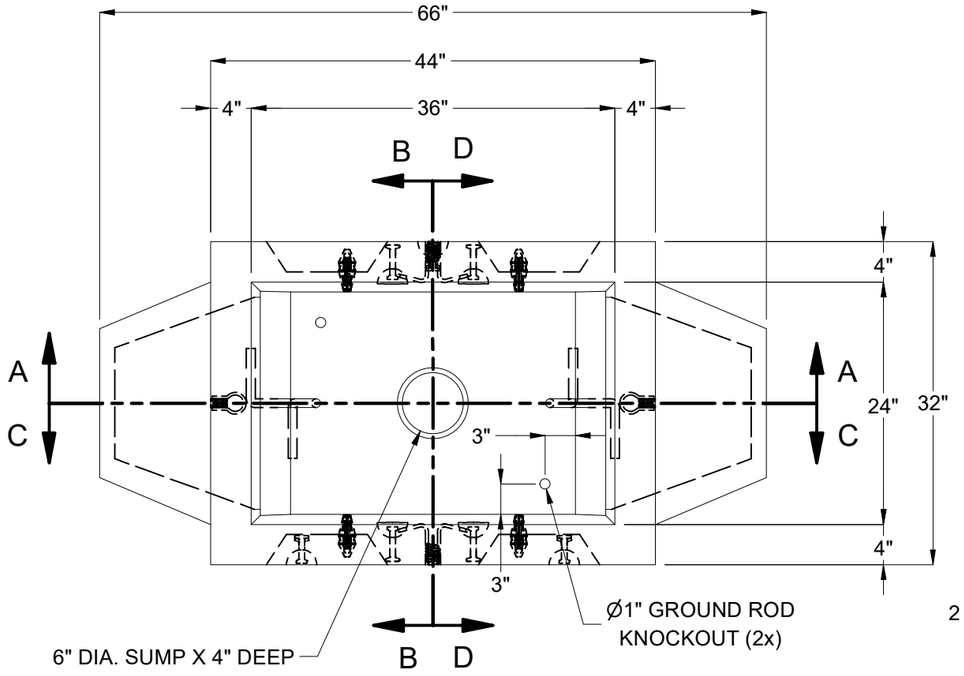

PLAN VIEW

(COVER NOT SHOWN FOR CLARITHY)

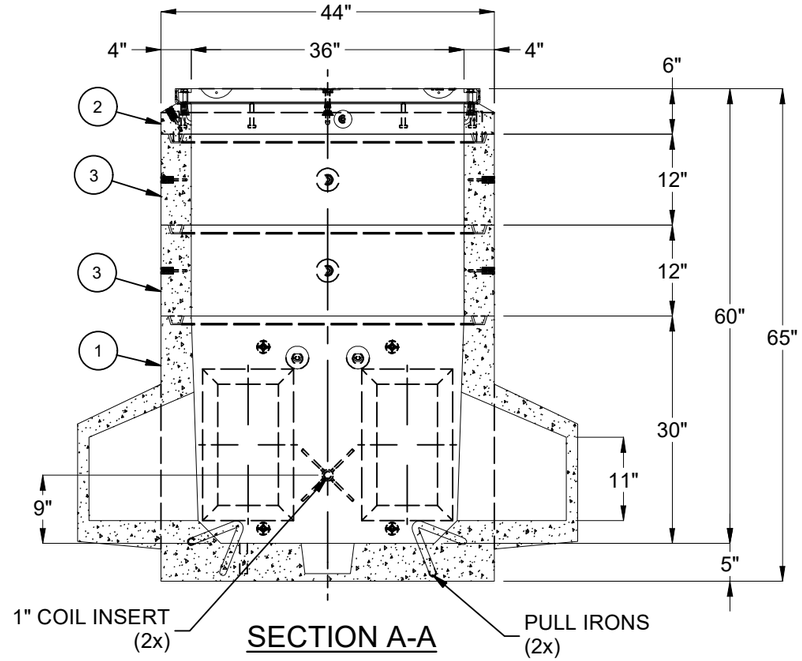

SECTION A-A

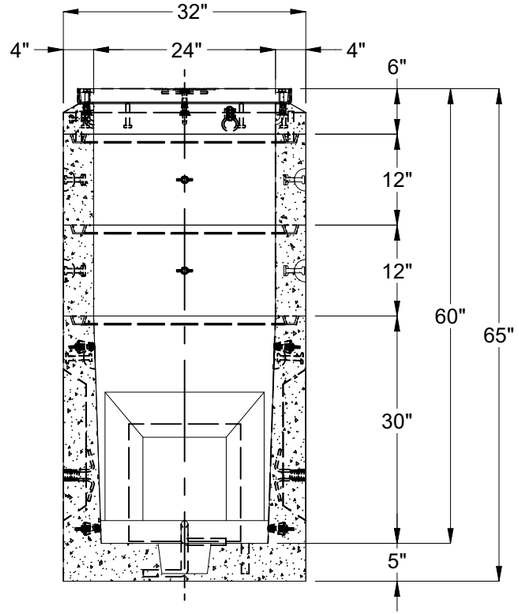

SECTION B-B

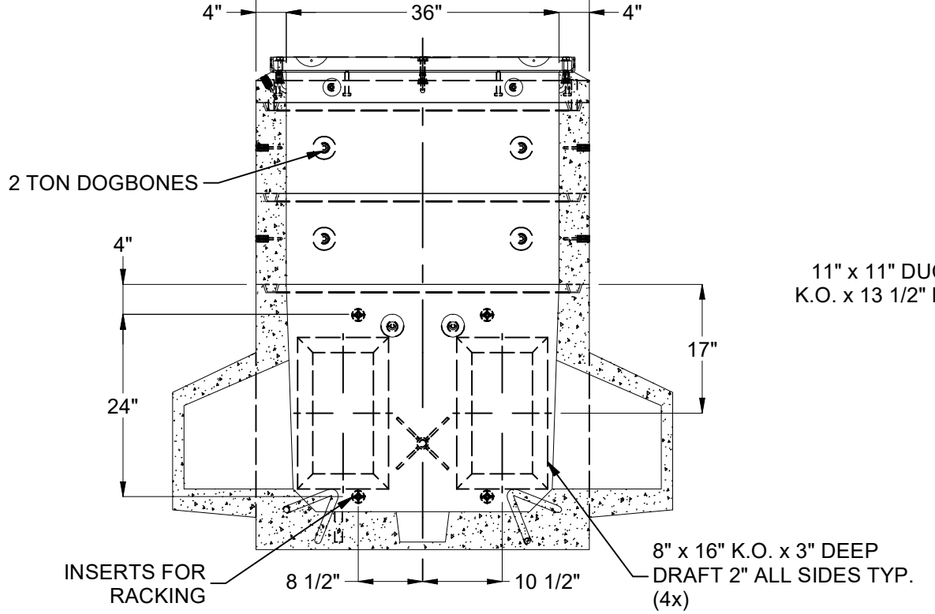

SECTION C-C

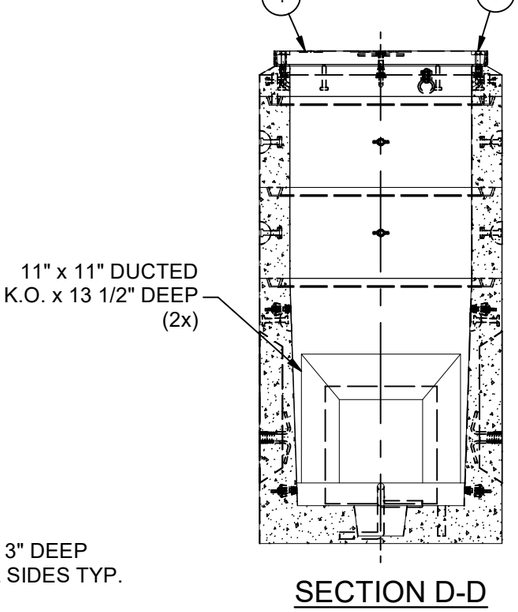

SECTION D-D

BURY DEPTH:	0.0' - 0.3' to Top		
WATER LEVEL:	3.0'	APPROX. WEIGHT:	3612 Lbs
DESIGN SPEC:	ASTM C857,ACI 318	LOADING SPEC:	A-16 (AASHTO HS20-44)
AGENCY:	CITY OF MORENO VALLEY	AGENCY SPEC:	MVEU-721-0

JENSEN PRECAST EST. 1968

WWW.JENSENPRECAST.COM

©2023 Jensen Precast- All rights reserved.
All materials appearing as Jensen Precast documents and the like are proprietary work product and are protected under U.S. copyright and other laws.
Unless in conjunction with business conducted with Jensen Precast, any use of Jensen Precast work product without express, written consent is prohibited, and recipient is prohibited from distributing any and all work product to non-approved third parties under penalty of civil action.

DESCRIPTION:	Vault 2436 Layout Assembly CITY OF MORENO VALLEY MVEU-721-0 RPM PARKWAY COVER LAYOUT REVIEW		REV: A-7
PART NUMBER:	200071012	DRAWN BY:	R. Ramos
CREATED:	12/20/2022	MODIFIED:	1/11/2023
			SHEET: 2 OF 2

200071012.idw