HN0916
CONCRETE HANDHOLE

Replaces Brooks 3MB

DESCRIPTION

HN 0916x12 Concrete Box Mousehole

BODY

Weight: 97 lbs.
Material: Precast Concrete w/ Composite Frame
Other Features: Mouseholes (2)

COVER

Shown: Polymer Cover (10 lbs)

See Other Cover Options Below

PERFORMANCE

Standard: ASTM C857

LOADING

Rating: Light Duty Pedestrian (300 psf)

PALLET QUANTITY

Number on Pallet: 28

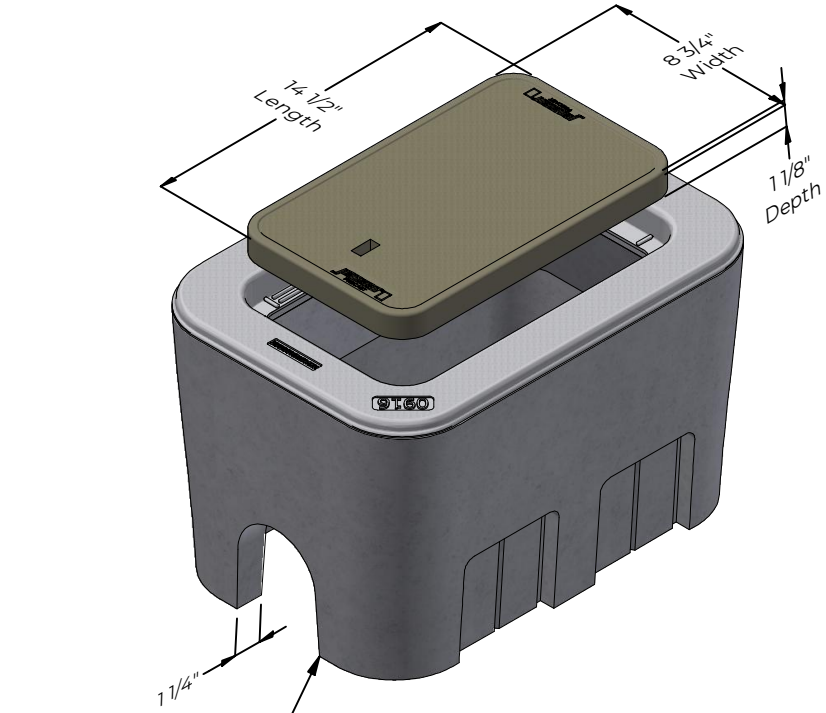

Compare to Christy B03

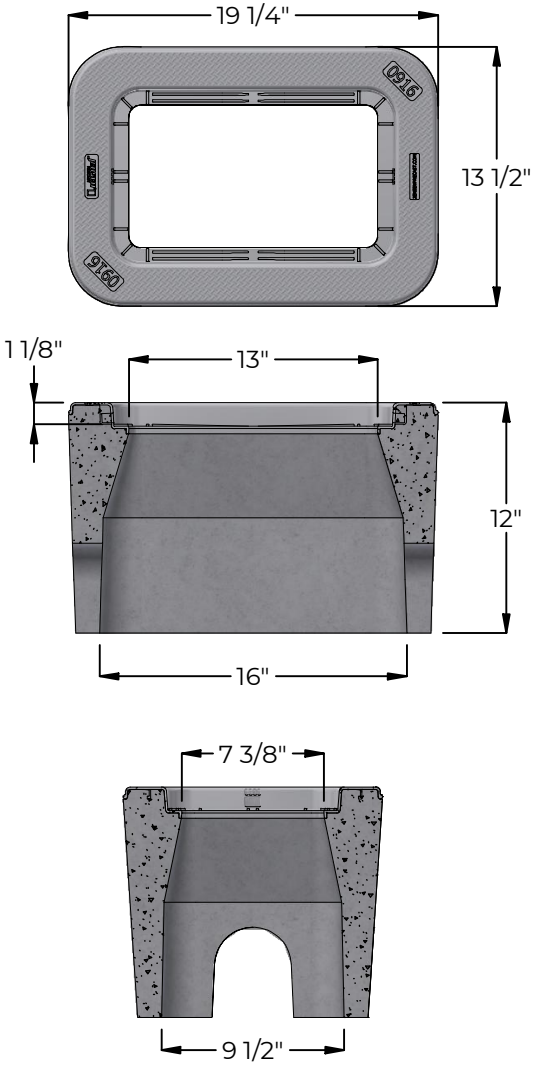

COVER OPTIONS

Cover Comes standard with permanent markings and markings for manufacturer.

Standard, Custom Markings, and Nameplate versions Available

AMR and Reader Lids



SMC Cover
5 lbs



Cast Iron
16 lbs



Cast Iron Grate
19 lbs

HN-02
CONCRETE HANDHOLE

Replaces Brooks 2PB

DESCRIPTION

HN 02x12 Concrete Box 3/8-16 Alum Nut

BODY

Weight: 166 lbs.

Material: Precast Concrete w/ Composite Frame

COVER

Shown: Polymer Cover (35 lbs)

See Other Cover Options Below

PERFORMANCE

Standard: ASTM C857

LOADING

Rating: Light Duty Pedestrian (300 psf)

PALLET QUANTITY

Number on Pallet: 16

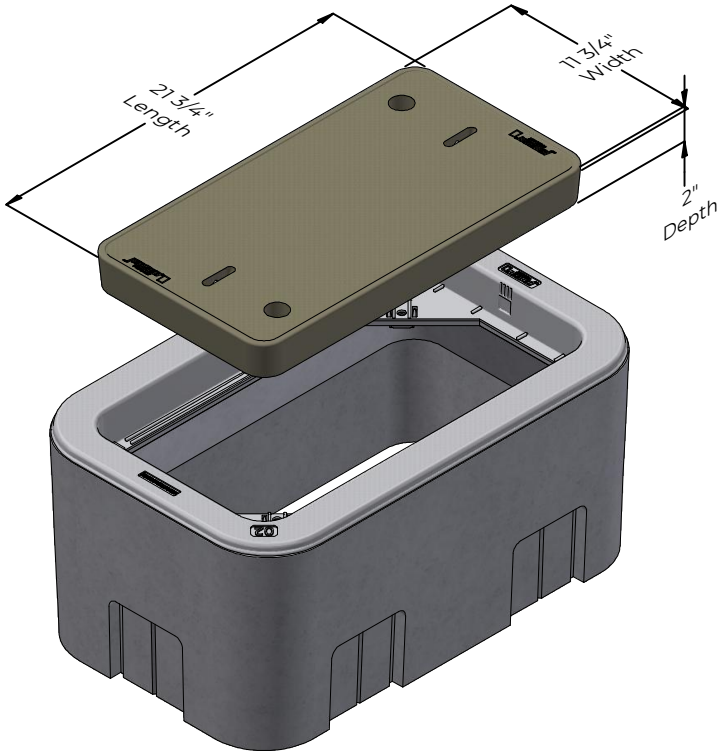

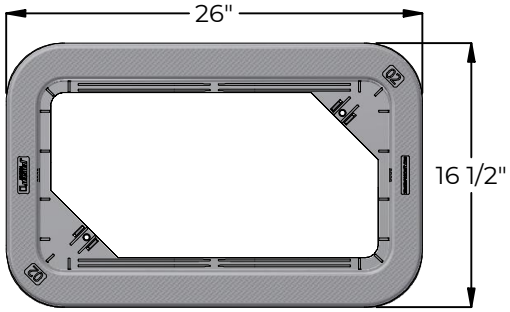

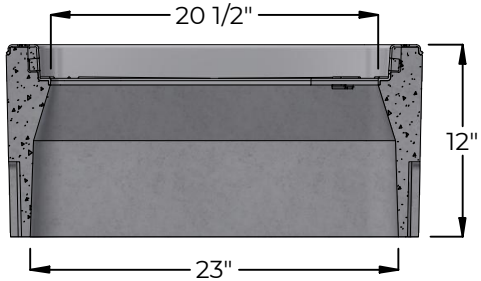

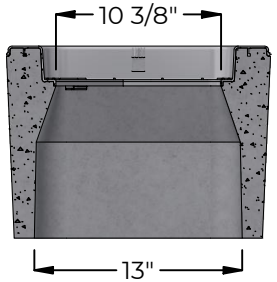

COVER OPTIONS

Cover Comes standard with permanent markings and markings for manufacturer.

Standard, Custom Markings, and Nameplate versions Available

AMR and Reader Lids

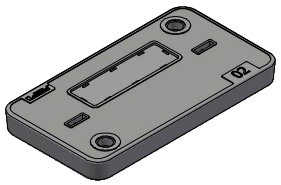

SMC Cover
19 lbs

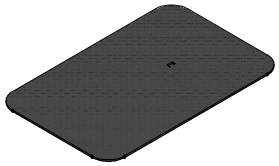

Steel Superimposed
28 lbs

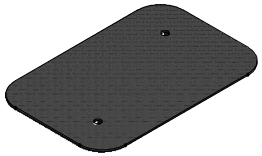

Steel Superimpsoed w/ Bolt Down
28 lbs

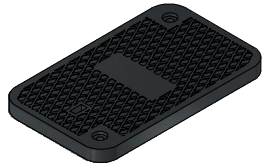

Cast Iron Bolt Down
30 lbs

HN1220
CONCRETE HANDHOLE

Replaces Brooks 37MB

DESCRIPTION

HN 1220x12 Concrete Box 3/8-16 Alum Nut

BODY

Weight: 131 lbs

Material: Precast Concrete w/ Composite Frame

Extension Available: 12" tall, 138 lbs

COVER

Shown: Polymer Cover (24 lbs)

See Other Cover Options Below

PERFORMANCE

Standard: ASTM C857

LOADING

Rating: Light Duty Pedestrian (300 psf)

PALLET QUANTITY

Number on Pallet: 20

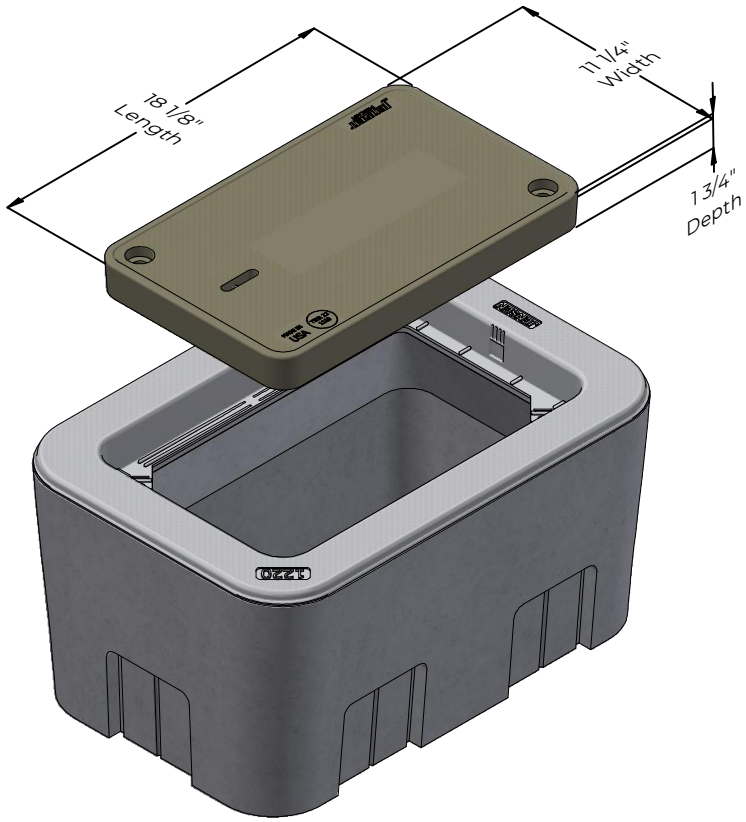

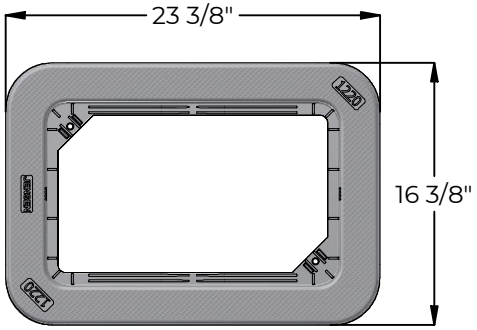

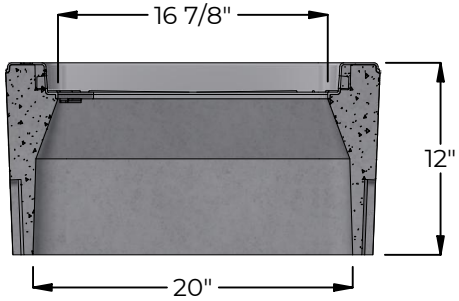

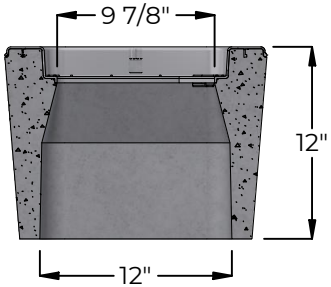

COVER OPTIONS

Cover Comes standard with permanent markings and markings for manufacturer.

Standard, Custom Markings, and Nameplate versions Available

AMR and Reader Lids



SMC Cover
14 lbs

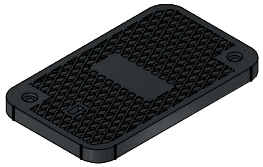

Cast Iron Cover
22 lbs



S-Cover
19 lbs, Opening: 8 5/16" x 4 11/16"



Reader Lid
4 lbs, 9 1/8" x 5 1/2"

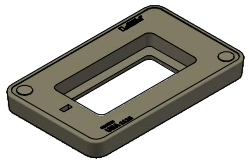

A5-Cover
17 lbs, Opening: 9 3/8" x 3 3/4"



A5 Lid
lbs, 11 1/4" x 5 5/8"

HN2436
CONCRETE HANDHOLE

Replaces Brooks 68MB

DESCRIPTION

HN 2436x14 Concrete Box 3/8-16 Alum Nut

BODY

Weight: 265 lbs

Material: Precast Concrete w/ Composite Frame

Extension Available: 10" tall, 207 lbs

COVER

Shown: Polymer Cover (170 lbs)

See Other Cover Options Below

PERFORMANCE

Standard: ASTM C857

LOADING

Rating: Light Duty Pedestrian (300 psf)

PALLET QUANTITY

Number on Pallet: 3



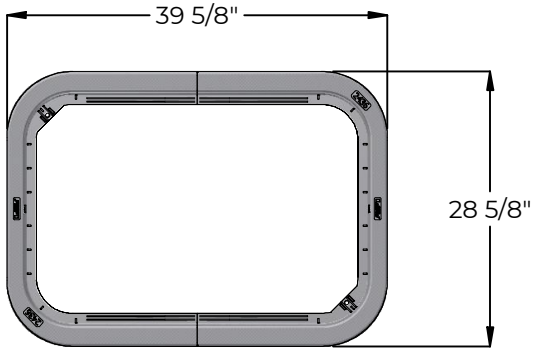

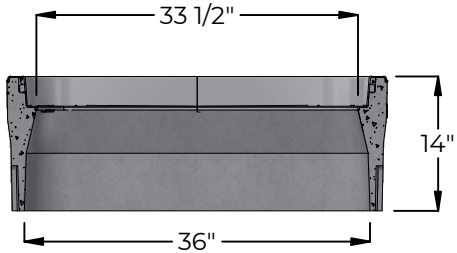

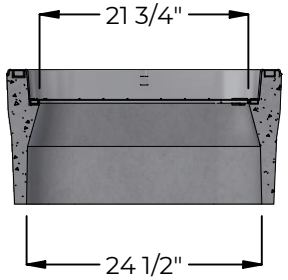

COVER OPTIONS

Cover Comes standard with permanent markings and markings for manufacturer.

Standard, Custom Markings, and Nameplate versions Available

AMR and Reader Lids



SMC Cover
67 lbs



Steel Cover Superimposed w/ Round Lid
117 lbs, Opening: 7 3/4"



Steel Cover Superimposed
115 lbs

HNV08
(Brooks 1RD/1SP)

DESCRIPTION
HNV08x12 Cast-In Frame

BODY
Weight: 38 lbs
Material: Precast Concrete w/ Composite Frame
Other Features: Mouseholes (2)

COVER
Shown: SMC Cover (2 lbs)

See Other Cover Options Below

PERFORMANCE
Standard: ASTM C857

LOADING
Rating: Light Duty Pedestrian (300 psf)

PALLET QUANTITY
Number on Pallet: 48

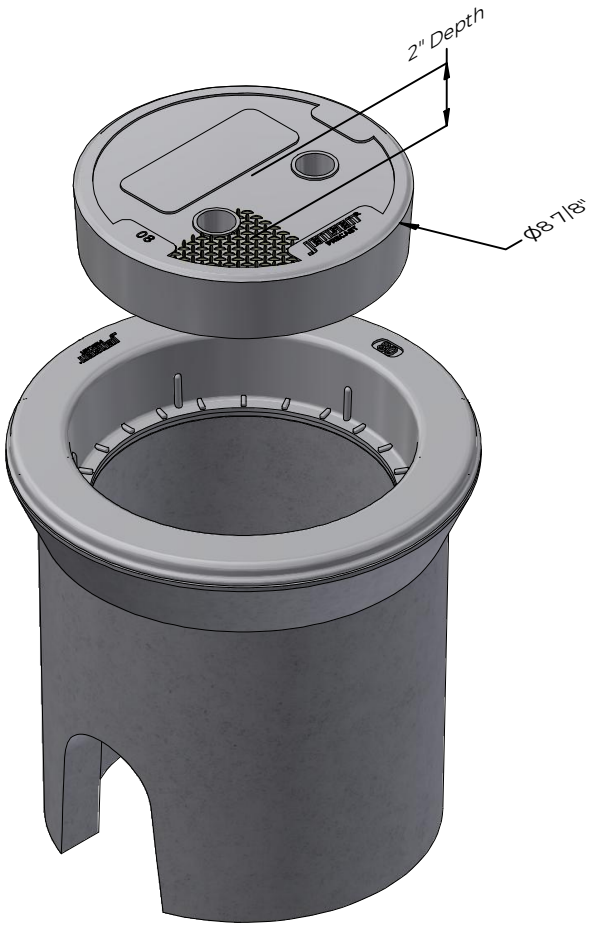

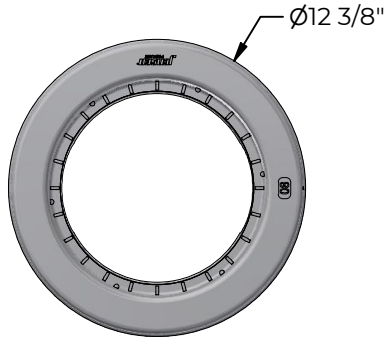

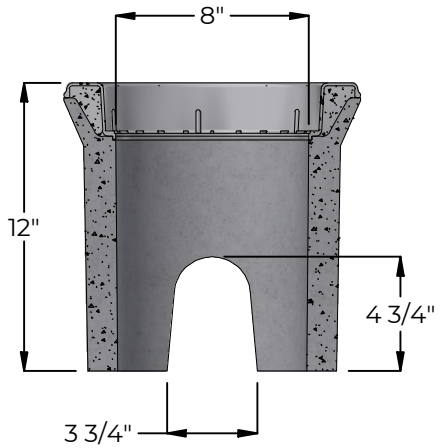

COVER OPTIONS
Cover Comes standard with permanent markings and markings for manufacturer.

Standard, Custom Markings, and Nameplate versions Available

AMR and Reader Lids



Cast Iron Cover
8 lbs



Cast Iron Grate
10 lbs

HN1730
CONCRETE HANDHOLE

DESCRIPTION
HN 1730x12 Concrete Box 3/8-16 Alum Nut

BODY
Weight: 188 lbs.
Material: Precast Concrete w/ Composite Frame

COVER
Shown: Polymer Cover (72 lbs)

See Other Cover Options Below

PERFORMANCE
Standard: ASTM C857

LOADING
Rating: Light Duty Pedestrian (300 psf)

PALLET QUANTITY
Number on Pallet: 8

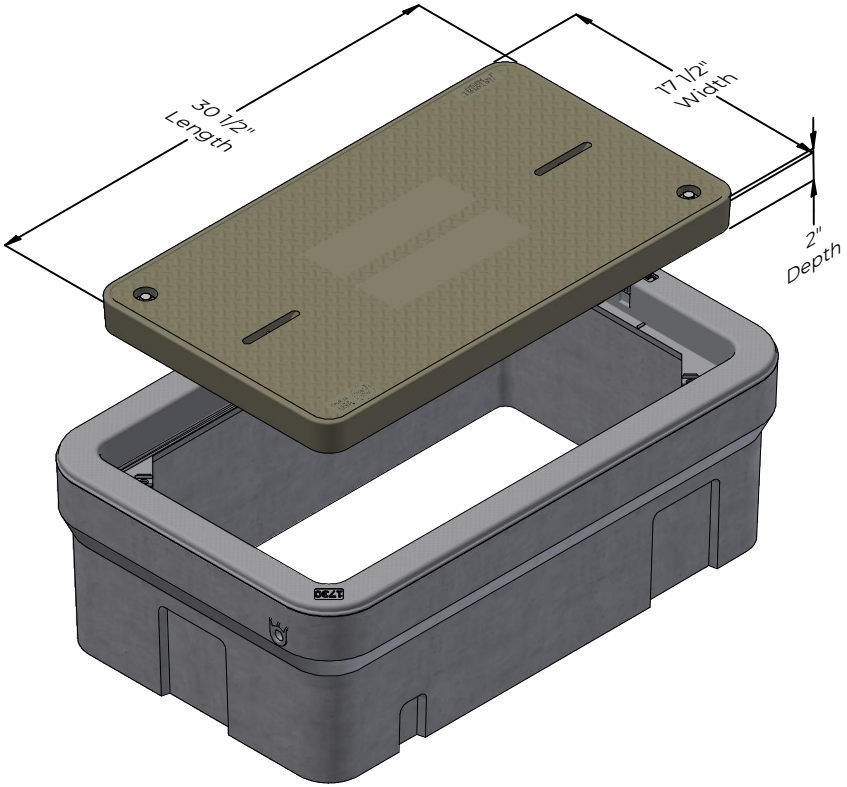

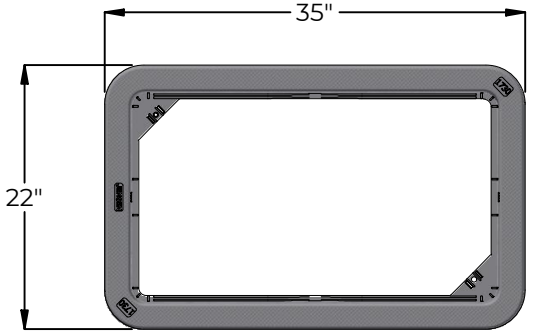

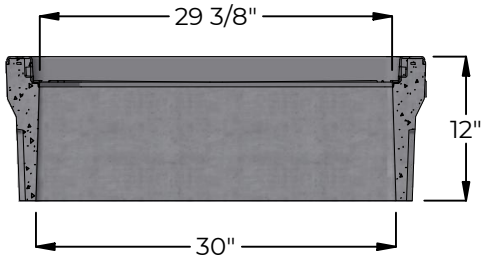

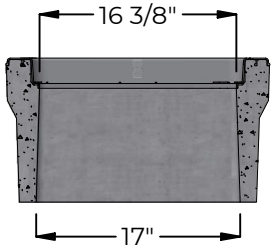

COVER OPTIONS
Cover Comes standard with permanent markings and markings for manufacturer.

Standard, Custom Markings, and Nameplate versions Available

AMR and Reader Lids


SMC Cover
27 lbs

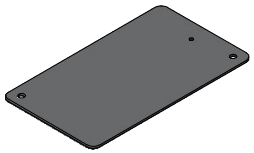
Steel Cover, Flush
80 lbs

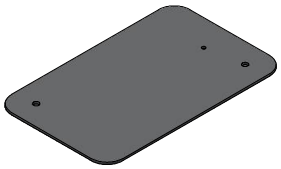
Steel Cover, Super-Imposed
90 lbs

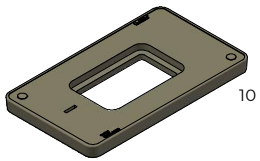

Reader Lid
10 lbs, 14 1/2" x 8 3/4"

S-Cover
57 lbs, Opening: 12 3/4" x 7"


Steel Lock-Lid
71 lbs

HN1324
CONCRETE HANDHOLE

DESCRIPTION
HN 1324x12 Concrete Box 3/8-16 Alum Nut

BODY
Weight: 144 lbs.
Material: Precast Concrete w/ Composite Frame

COVER
Shown: Polymer Cover (43 lbs)

See Other Cover Options Below

PERFORMANCE
Standard: ASTM C857

LOADING
Rating: Light Duty Pedestrian (300 psf)

PALLET QUANTITY
Number on Pallet: 16

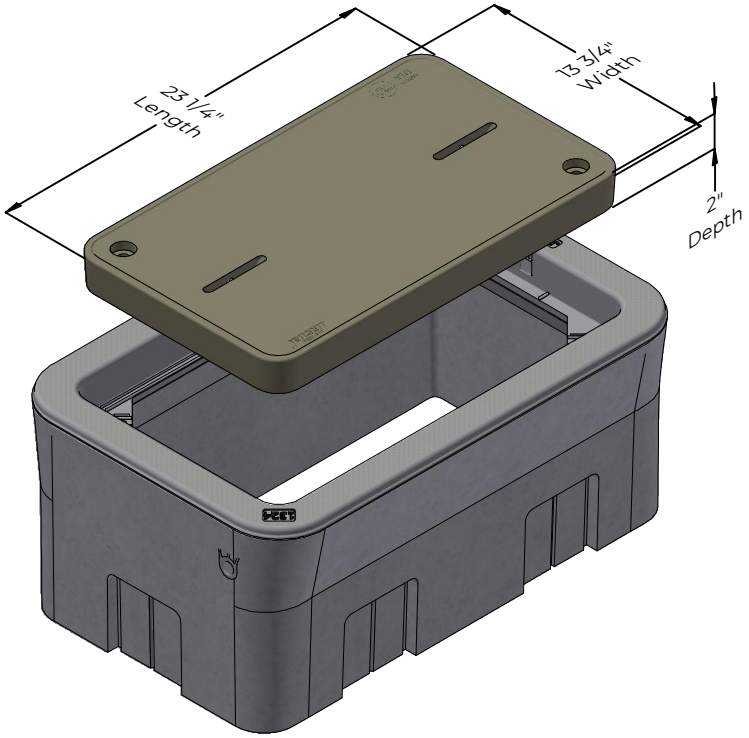

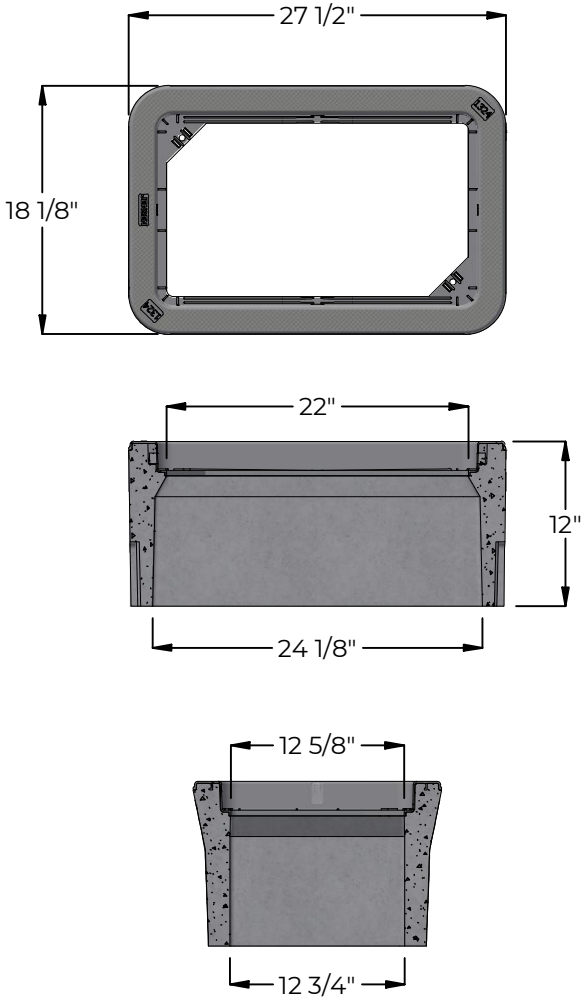

COVER OPTIONS
Cover Comes standard with permanent markings and markings for manufacturer.

Standard, Custom Markings, and Nameplate versions Available

AMR and Reader Lids

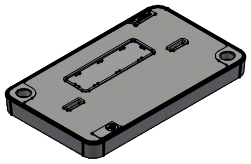
SMC Cover
19 lbs

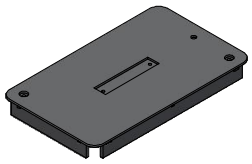
Steel Cover, Flush
40 lbs

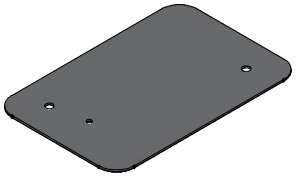
Steel Cover, Super-Imposed
57 lbs

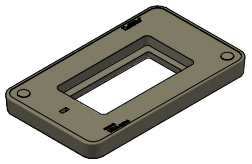

Reader Lid
8 lbs, 13 3/8" x 7"

S-Cover
32 lbs, Opening: 11 3/4" x 5"


Steel Lock-Lid
47 lbs

775-352-2700
info@jensenprecast.com
www.jensenprecast.com

HN1222
CONCRETE HANDHOLE

DESCRIPTION
HN 1222x12 Concrete Box 3/8-16 Alum Nut

BODY
Weight: 127 lbs.
Material: Precast Concrete w/ Composite Frame
Other Features: Mouseholes (2)

COVER
Shown: Polymer Cover (29 lbs)

See Other Cover Options Below

PERFORMANCE
Standard: ASTM C857

LOADING
Rating: Light Duty Pedestrian (300 psf)

PALLET QUANTITY
Number on Pallet: 20

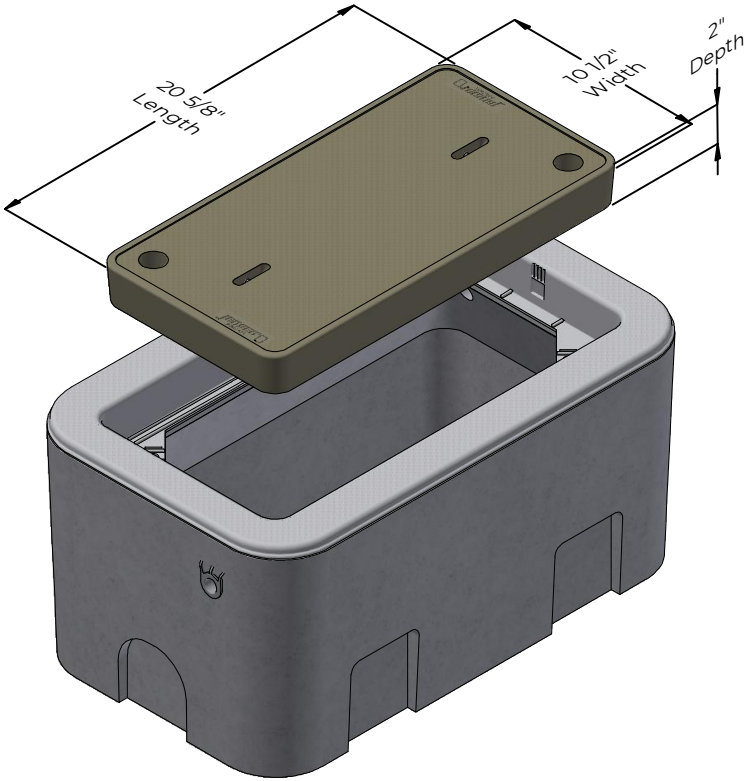

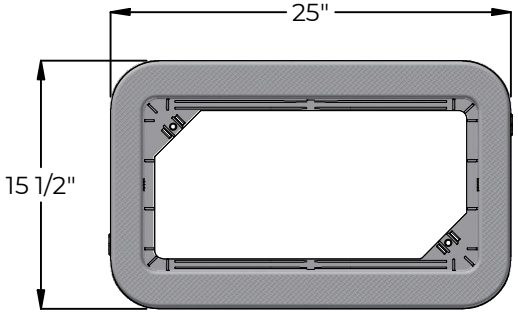

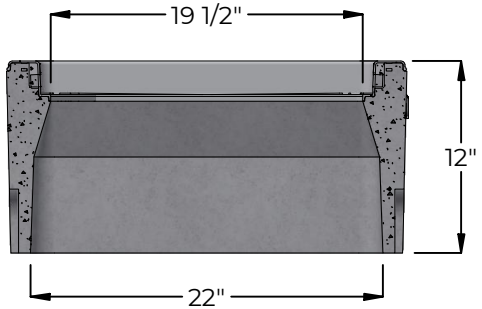

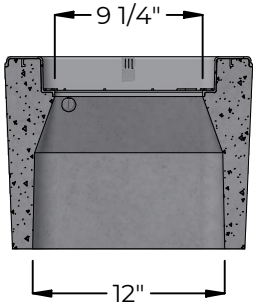

COVER OPTIONS
Cover Comes standard with permanent markings and markings for manufacturer.

Standard, Custom Markings, and Nameplate versions Available

AMR and Reader Lids



SMC Cover
16 lbs

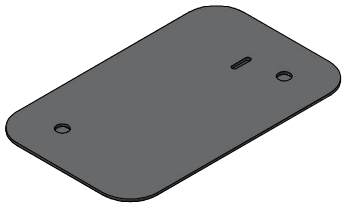

Steel Cover, Super-Imposed
33 lbs



Steel Lock-Lid
34 lbs

HNW1222
CONCRETE HANDHOLE

DESCRIPTION
HN 1222x12 Concrete Box 3/8-16 Alum Nut Mousehole

BODY
Weight: 125 lbs.
Material: Precast Concrete w/ Composite Frame
Other Features: Mouseholes (2)

COVER
Shown: Polymer Cover with Touch-&-Read Hole (29 lbs)

See Other Cover Options Below

PERFORMANCE
Standard: ASTM C857

LOADING
Rating: Light Duty Pedestrian (300 psf)

PALLET QUANTITY
Number on Pallet: 20

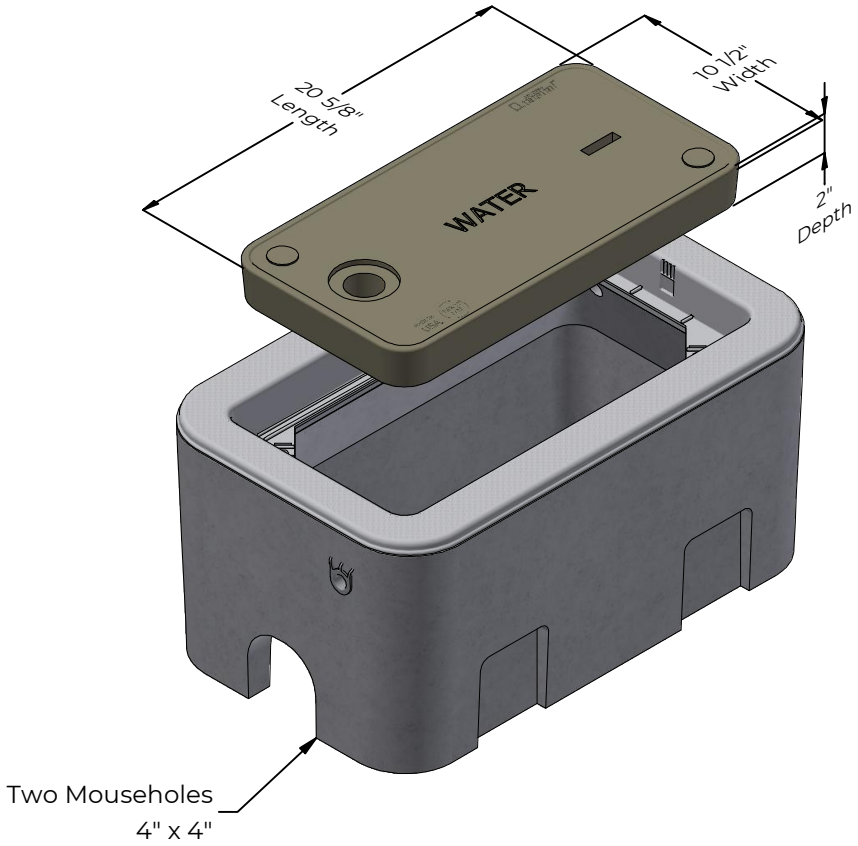

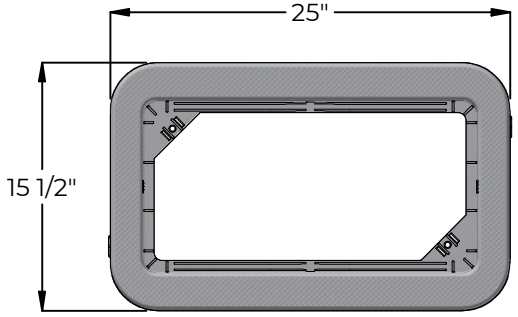

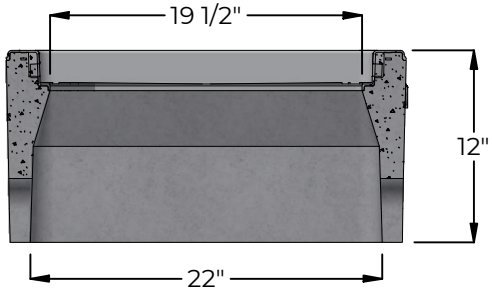

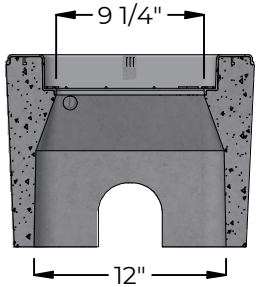

COVER OPTIONS
Cover Comes standard with permanent markings and markings for manufacturer.

Standard, Custom Markings, and Nameplate versions Available

AMR and Reader Lids


SMC Cover
16 lbs

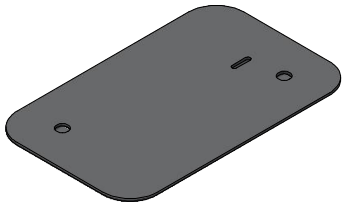
Steel Cover, Super-Imposed
33 lbs


Steel Lock-Lid
34 lbs

HN1017
CONCRETE HANDHOLE

DESCRIPTION
HN 1017x12 Concrete Box 3/8-16 Alum Nut

BODY
Weight: 96 lbs.
Material: Precast Concrete w/ Composite Frame

COVER
Shown: Polymer Cover (18 lbs)

See Other Cover Options Below

PERFORMANCE
Standard: ASTM C857

LOADING
Rating: Light Duty Pedestrian (300 psf)

PALLET QUANTITY
Number on Pallet: 28

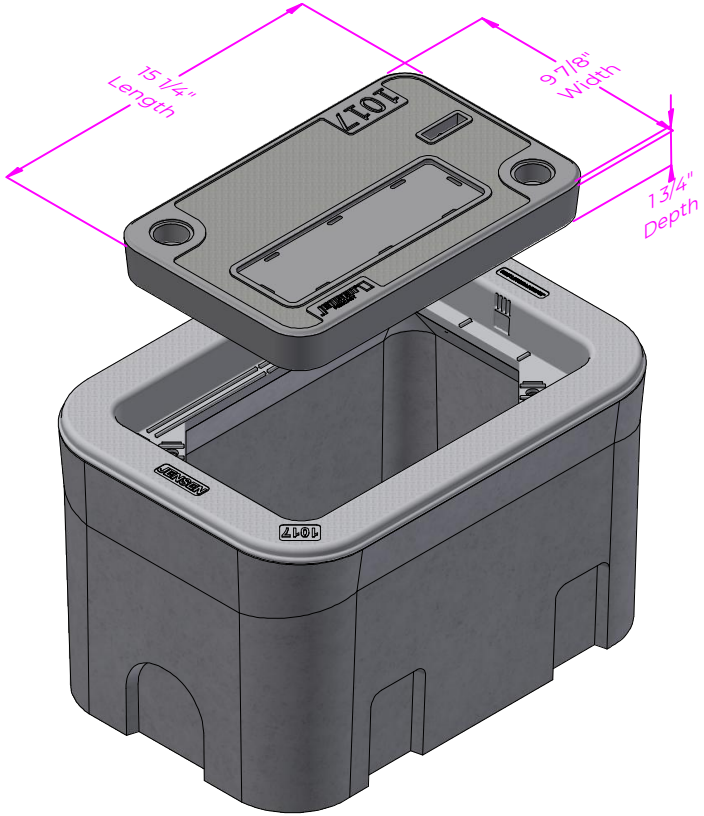

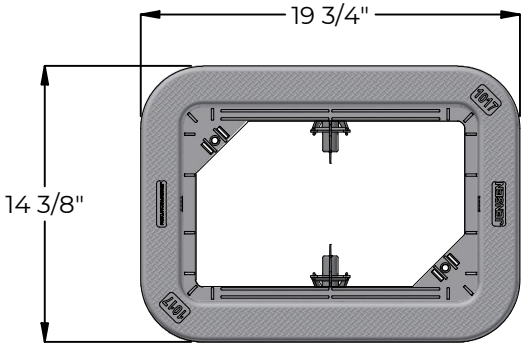

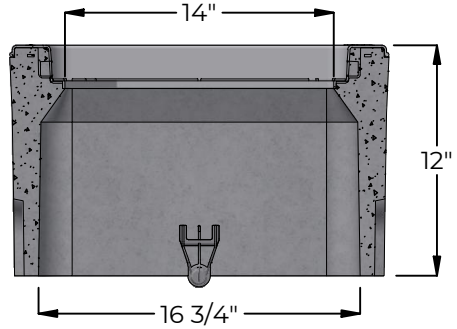

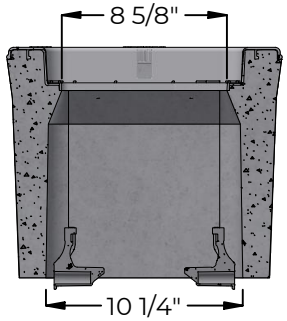

COVER OPTIONS
Cover Comes standard with permanent markings and markings for manufacturer.

Standard, Custom Markings, and Nameplate versions Available

AMR and Reader Lids


SMC Cover
11 lbs

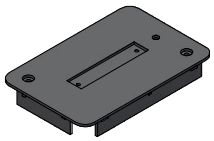
Steel Cover, Flush
17 lbs

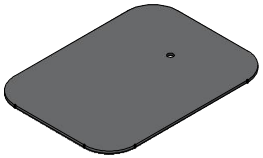
Steel Cover, Super-Imposed
30 lbs


S-Cover
12 lbs, Opening: 8" x 4 5/8"


Reader Lid
4 lbs, 9 1/8" x 5 1/2"


Cover with Hinged Cast Iron Lid
28 lbs


Steel Lock-Lid
23 lbs