NOTES
■ FOR COMPLETE DESIGN AND PRODUCT INFORMATION CONTACT JENSEN PRECAST.

BILL OF MATERIALS

ITEM	UNIT QTY	QTY	PART NUMBER	DESCRIPTION
1	5.460 ft^3	5.460 ft^3	100011425	CONCRETE MIX GENERIC 5000 PSI
2	1	1	100031278	PLATE 2x3 BRASS
3	1	2	100034833	ANCHOR RAPID LIFT TECH 2.5T CLUTCH 2.4375IN LONG MB RL-25
4	1	1	300152019	REINFORCING MAT 300152019
5	1	2	100002766	Insert Ferrule Loop 0.625 x 3.5" Zinc (F42 or Equiv.)
6	1	2	100002765	Insert Ferrule Loop 0.5 x 2.75" Zinc (F42 or Equiv.)

200070830.idw

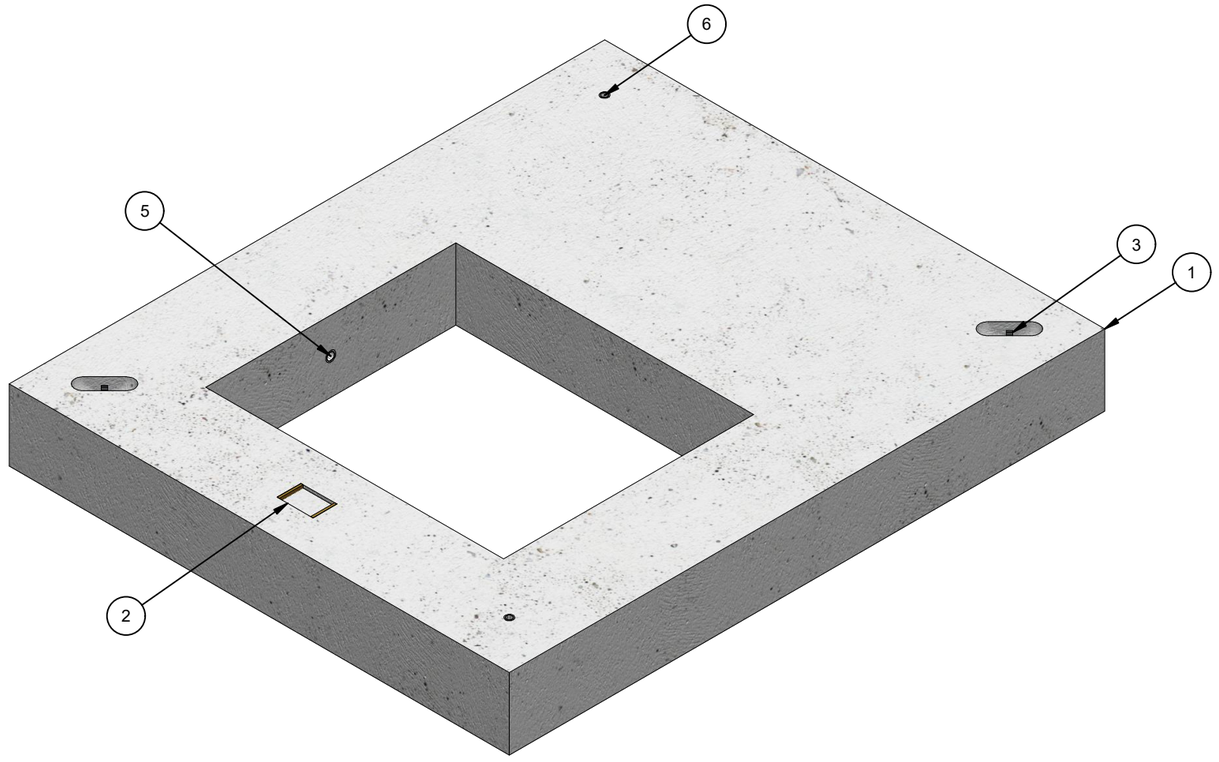

ISO VIEW

LIFTING NOTES
■ THIS CONCRETE PRODUCT IS DESIGNED TO BE LIFTED AT 3500 PSI WITH 4 LIFT CONNECTIONS EQUALLY LOADED TO 4 LIFTING POINTS AT A MINIMUM 60° SLING ANGLE, MEASURED FROM HORIZONTAL.

BURY DEPTH:	0.0' - 0.0' to Top		
WATER LEVEL:	Below Structure	APPROX. WEIGHT:	826.35 Lbs
DESIGN SPEC:	ACI 318,ASTM C857	LOADING SPEC:	A-03 (300 psf)
REINFORCEMENT TYPE:	Rebar	LIFTING TYPE:	Tech Erection Anchor

JENSEN PRECAST EST. 1968

WWW.JENSENPRECAST.COM

©2023 Jensen Precast- All rights reserved.
All materials appearing as Jensen Precast documents and the like are proprietary work product and are protected under U.S. copyright and other laws.
Unless in conjunction with business conducted with Jensen Precast, any use of Jensen Precast work product without express, written consent is prohibited, and recipient is prohibited from distributing any and all work product to non-approved third parties under penalty of civil action.

CHANGE HISTORY			
NO.	DESCRIPTION	DATE	BY
A	DRAWING CREATED	12/8/2022	E.Fine

DESCRIPTION:	Pad 4250x6 21"x25"E CASTING LAYOUT		REV: A-6
PART NUMBER:	200070830	DRAWN BY:	A.Cho
CREATED:	12/8/2022	MODIFIED:	1/27/2023
			SHEET: 1 OF 2

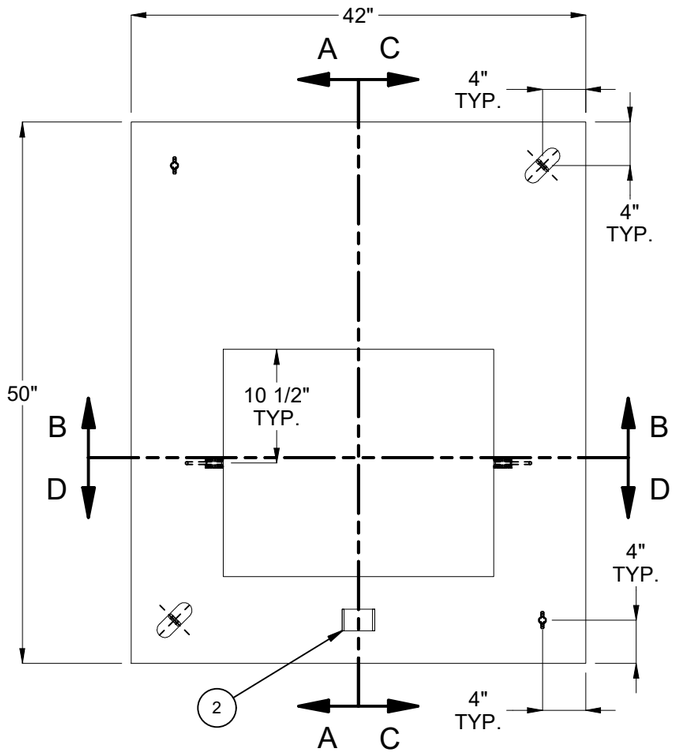

PLAN VIEW

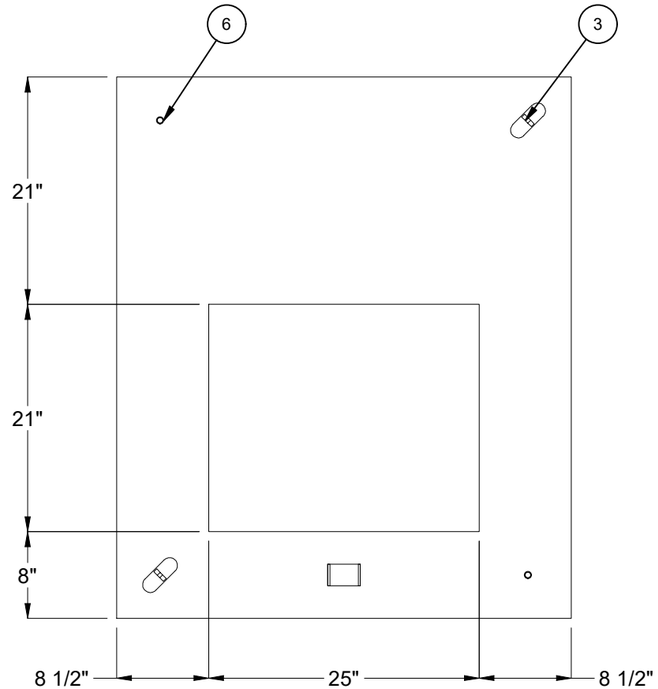

PLAN VIEW

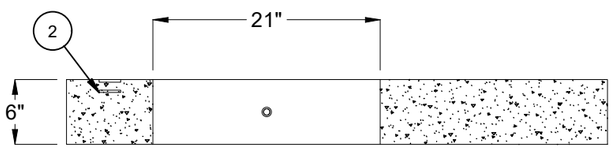

SECTION A-A

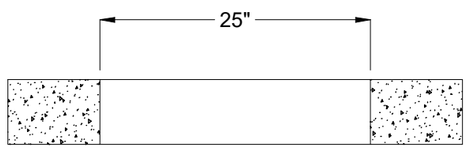

SECTION B-B

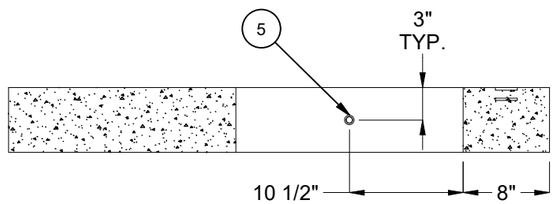

SECTION C-C



SECTION D-D

BURY DEPTH:	0.0' - 0.0' to Top		
WATER LEVEL:	Below Structure	APPROX. WEIGHT:	826.35 Lbs
DESIGN SPEC:	ACI 318,ASTM C857	LOADING SPEC:	A-03 (300 psf)
REINFORCEMENT TYPE:	Rebar	LIFTING TYPE:	Tech Erection Anchor

JENSEN PRECAST EST. 1968

WWW.JENSENPRECAST.COM

©2023 Jensen Precast- All rights reserved.
All materials appearing as Jensen Precast documents and the like are proprietary work product and are protected under U.S. copyright and other laws.
Unless in conjunction with business conducted with Jensen Precast, any use of Jensen Precast work product without express, written consent is prohibited, and recipient is prohibited from distributing any and all work product to non-approved third parties under penalty of civil action.

DESCRIPTION:	Pad 4250x6 21"x25"E CASTING DRAWING		REV: A-6
PART NUMBER:	200070830	DRAWN BY:	A.Cho
CREATED:	12/8/2022	MODIFIED:	1/27/2023
			SHEET: 2 OF 2

200070830.idw