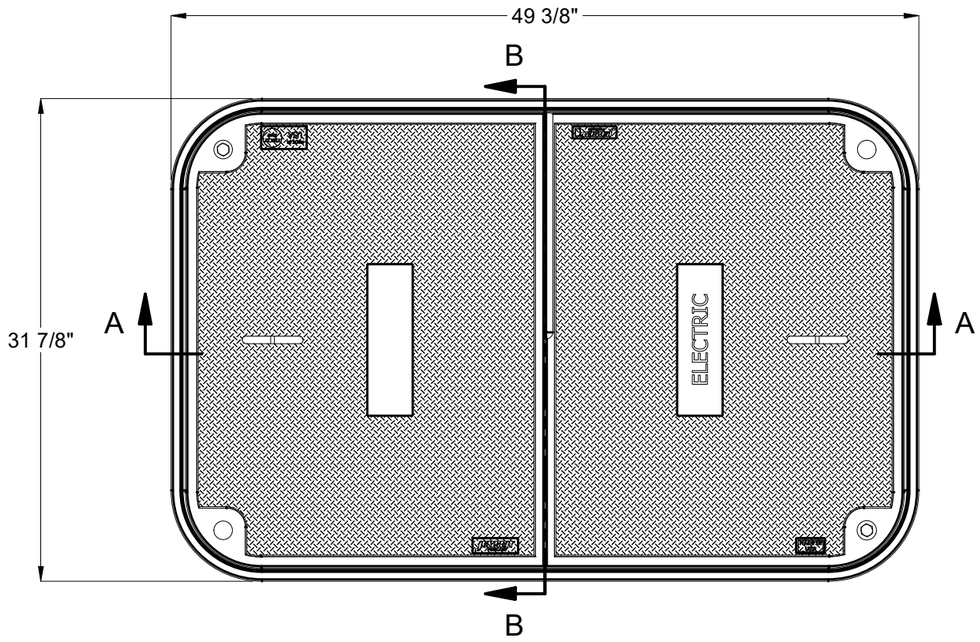

BILL OF MATERIALS

ITEM	QTY	PART NUMBER	DESCRIPTION
1	1	200056813	HPC 3048 Bolt Down TIER-22 Solid Polymer Concrete Handhole Cover UNI-HALF ELECTRIC
2	1	200047085	HPC 3048x18 Polymer Box 1/2-13 SS Nut
3	2	100025889	BOLT HEX 1/2-13 UNC 4 304SS FULL THREAD
4	2	100007767	WASHER FLAT 1/2 REGULAR 1.25 OD 304SS
5	1	200043208	HPC 3048 Polymer Cover, Tier-22, Bolt Down, Blank UNI-HALF

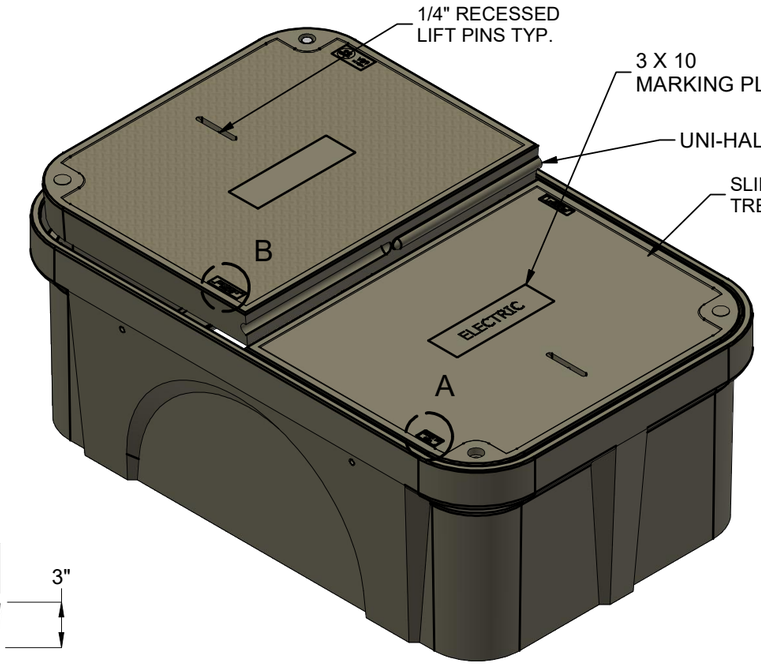

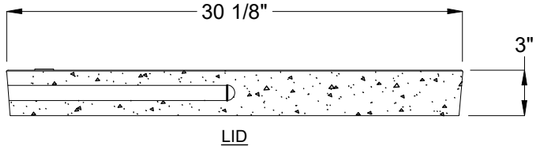

LID

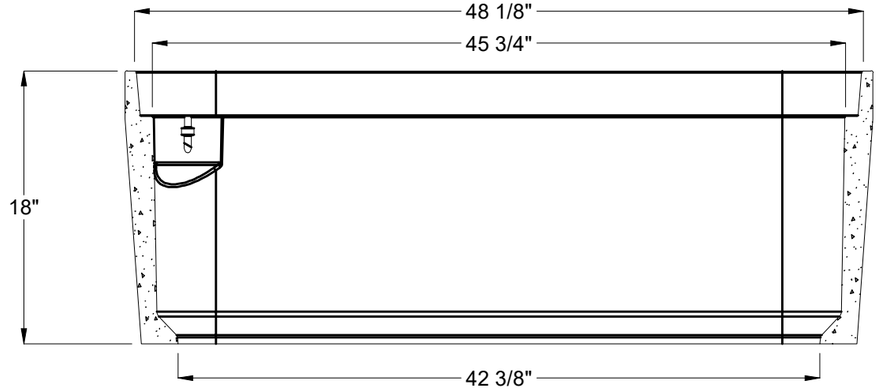

SECTION A-A

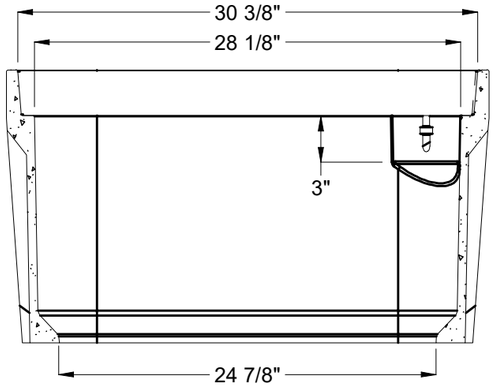

SECTION B-B



DETAIL A



DETAIL B

PALLET QUANTITY:	4	APPROX. WEIGHT:	468.39 lbs
CERTIFICATION:		DESIGN/TEST LOAD:	22.5/33.75 kip
DESIGN SPEC:	ANSI/SCTE 77	LOADING SPEC:	Tier-22
AGENCY:		AGENCY SPEC:	

JENSEN PRECAST EST. 1968

WWW.JENSENPRECAST.COM

©2018 Jensen Precast- All rights reserved.
All materials appearing as Jensen Precast documents and the like are proprietary work product and are protected under U.S. copyright and other laws.
Unless in conjunction with business conducted with Jensen Precast, any use of Jensen Precast work product without express, written consent is prohibited, and recipient is prohibited from distributing any and all work product to non-approved third parties under penalty of civil action.

DESCRIPTION:	HPC 3048x18 Polymer Assembly, Tier-22, 1/2-13 SS Nut, ELECTRIC		REV: A-1
PART #:	200070488	DRAWN BY:	M. Baumann
CREATED:	10/6/2020	MODIFIED:	12/1/2022
			SHEET: 1 OF 1

200070488.idw