BILL OF MATERIALS

ITEM	QTY	PART NUMBER	DESCRIPTION
1	1	100032419	HPC 2436 Polymer Cover, Tier-22, Bolt Down, ELECTRIC
2	1	200022167	HPC 2436x18 Polymer Box 1/2-13 SS Nut
3	2	100025889	BOLT HEX 1/2-13 UNC 4 304SS FULL THREAD
4	2	100007767	WASHER FLAT 1/2 REGULAR 1.25 OD 304SS

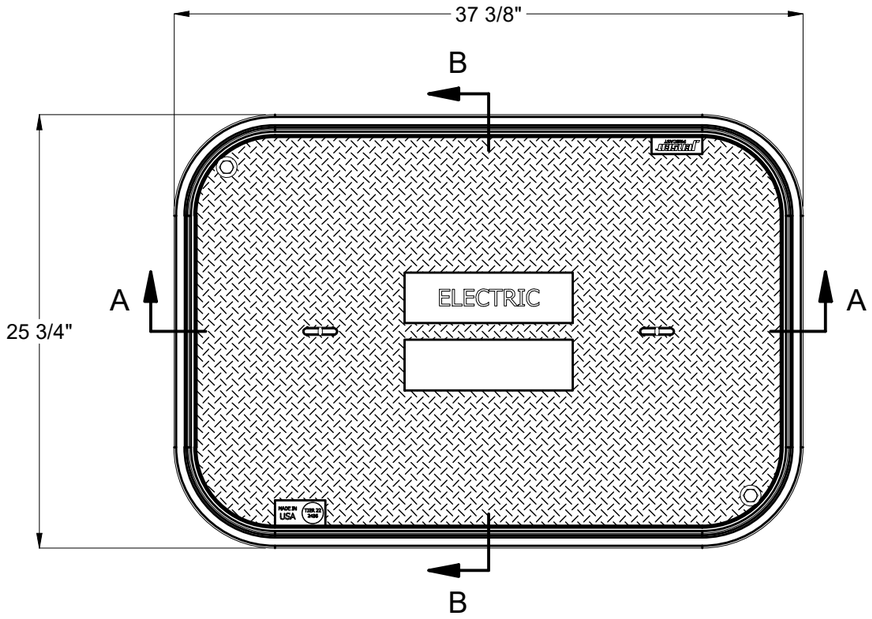

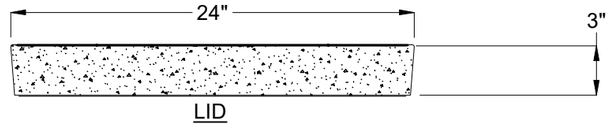

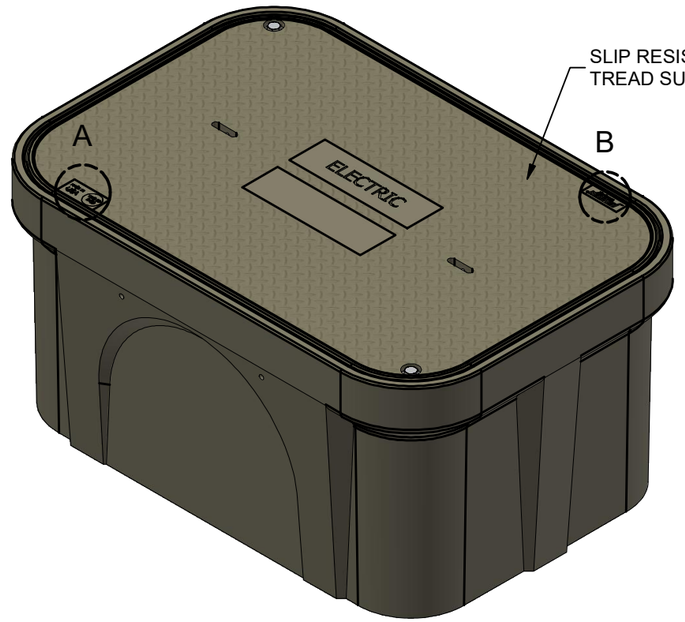

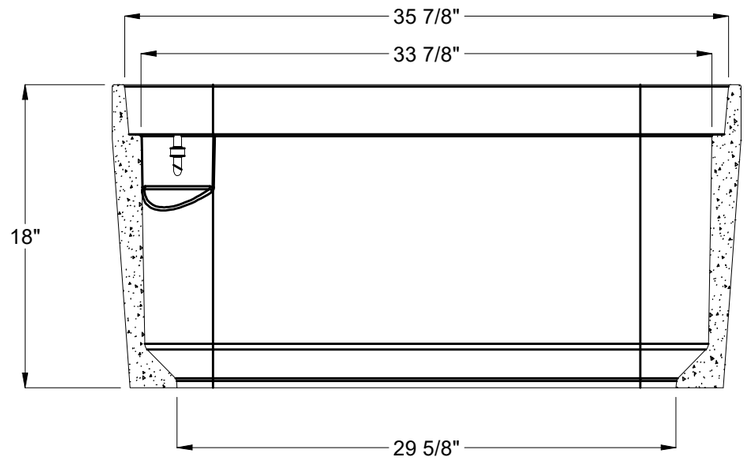

SECTION A-A

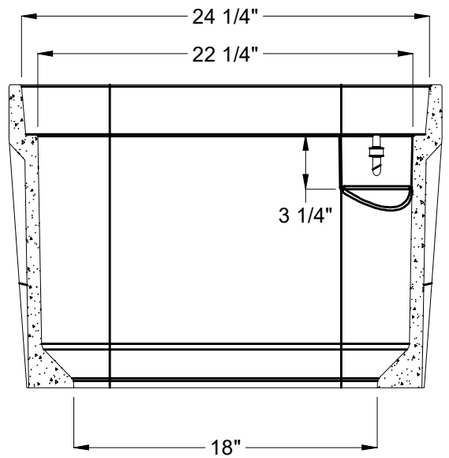

SECTION B-B



DETAIL A



DETAIL B

PALLET QUANTITY:	8	APPROX. WEIGHT:	308.25 lbs
CERTIFICATION:		DESIGN/TEST LOAD:	22.5/33.75 kip
DESIGN SPEC:	ANSI/SCTE 77	LOADING SPEC:	Tier-22
AGENCY:		AGENCY SPEC:	

JENSEN PRECAST EST. 1968

WWW.JENSENPRECAST.COM

©2018 Jensen Precast- All rights reserved.
All materials appearing as Jensen Precast documents and the like are proprietary work product and are protected under U.S. copyright and other laws.
Unless in conjunction with business conducted with Jensen Precast, any use of Jensen Precast work product without express, written consent is prohibited, and recipient is prohibited from distributing any and all work product to non-approved third parties under penalty of civil action.

DESCRIPTION:	HPC 2436x18 Polymer Assembly, Tier-22, 1/2-13 SS Nut, ELECTRIC		REV: A-1
PART #:	200070484	DRAWN BY:	M. Baumann
CREATED:	3/11/2019	MODIFIED:	11/29/2022
			SHEET: 1 OF 1

200070484.idw