DESIGN NOTES
■ THIS PRODUCT MUST ONLY BE PRODUCED IN A JENSEN INFRASTRUCTURE FACILITY.
■ ALL CONCRETE MUST HAVE A 28 DAY COMPRESSIVE STRENGTH OF 5,500 PSI.
■ REINFORCING STEEL MUST COMPLY WITH ASTM A615 GRADE 60 OR ASTM A706 GRADE 60.
■ CONCRETE MIX USED IN POURING THIS PRODUCT SHALL USE FLY ASH AS AN ADMIXTURE.
■ SEE TITLE BLOCK FOR BURY DEPTH RANGE, WATER TABLE LEVEL, AND DESIGN AND LOADING SPECIFICATIONS.
■ SOIL UNIT WEIGHT – 120 lbs/cu.ft.
■ EQUIVALENT LATERAL EARTH PRESSURE DRY: 36 lbs/cu.ft.
■ EQUIVALENT LATERAL EARTH PRESSURE WET: 80 lbs/cu.ft.
■ UNLESS OTHERWISE NOTED OR SPECIFIED THE STRUCTURE MUST BE INSTALLED PER "JENSEN PRECAST UNDERGROUND UTILITY STRUCTURES INSTALLATION PROCEDURE" FOUND AT https://www.jensenprecast.com/Utility-Structures-Installation-Instructions-d2595.pdf
■ DESIGNED PER CALCS. #31004.
■ ALL PARTS TO BE STENCILED: MFG DATE / PRODUCT ID / WEIGHT.
■ LIMIT OF COVER OVER ROOF SECTION IS 1'-6" TO 4'-0".
■ COVER DESIGN FOR TRAFFIC LOADING.
■ MINIMUM EXCAVATION SIZE: 9'-0" X 16'-0" X DEPTH REQ'D.
■ VAULT TO BE PLACED ON A MIN. 6" BASE OF CRUSHER RUN FOR EASE OF INSTALLATION AND EVEN LOAD DISTRIBUTION.
■ FINISH COATING: ALL INTERIOR WALLS AND CEILING SHALL BE PAINTED WHITE.

BILL OF MATERIALS

ITEM	UNIT QTY	QTY	PART NUMBER	DESCRIPTION	MASS (lb)
1	1	1	100013308	Vault 84168x48 Rect. Bottom Section Terminators Sump EDISON UGS VA 410	24982
2	1	1	100012828	Vault 84168x48 Rect. Top Section 48"x60"E Terminators Edison UGS VA 410	24987
3	1	2	200012851	Riser 4860x6 LADWP 1-802 2B	1202
4	1	1	200070377	Vault Neck and Plug Cover Assembly 4860x12 30"C Moreno Valley R-1581	3958
5	1	4	100009239	ROD THREADED COIL YELLOW DIP 3/4 X 10-1/2"	
6	1	8	100007136	WASHER FLAT 3/4 REGULAR TYPE A ZINC	
7	1	8	100007010	HEX COIL NUT 3/4-4.5 POST YELLOW DIP	
8	1	1	100007585	LADDER HANGER ASSEMBLY GALV	
9	1	1	100007320	LADDER HOOKED GALV 11FT ED/LA I3382	
10	1	14	100002527	CABLE RACK 18 HOLE GALV TABS	
11	1	30	100004339	BOLT HEX 1/2-13 UNC 2 304SS	
12	1	34	100007767	WASHER FLAT 1/2 REGULAR 1.25 OD 304SS	
13	1	4	100022758	GROUND ANCHOR BRACKET KIT HALO HB304R	
14	1	4	100004320	BOLT HEX 1/2-13 UNC 1 304SS	
15	1	1	100006783	SUMP COVER FOR 13"SUMP(15"OD)GALV DIA PLATE	
16	4.000 gal	4.000 gal	100006420	COATING PAINT LATEX WHITE	
17	1.000 ul	1.000 ul	100005749	SEALANT JOINT BUTYL RUBBER ASTM C-990 AND M198 CS-102 1IN EQUIV X14.5FT PER BOX 118FT	

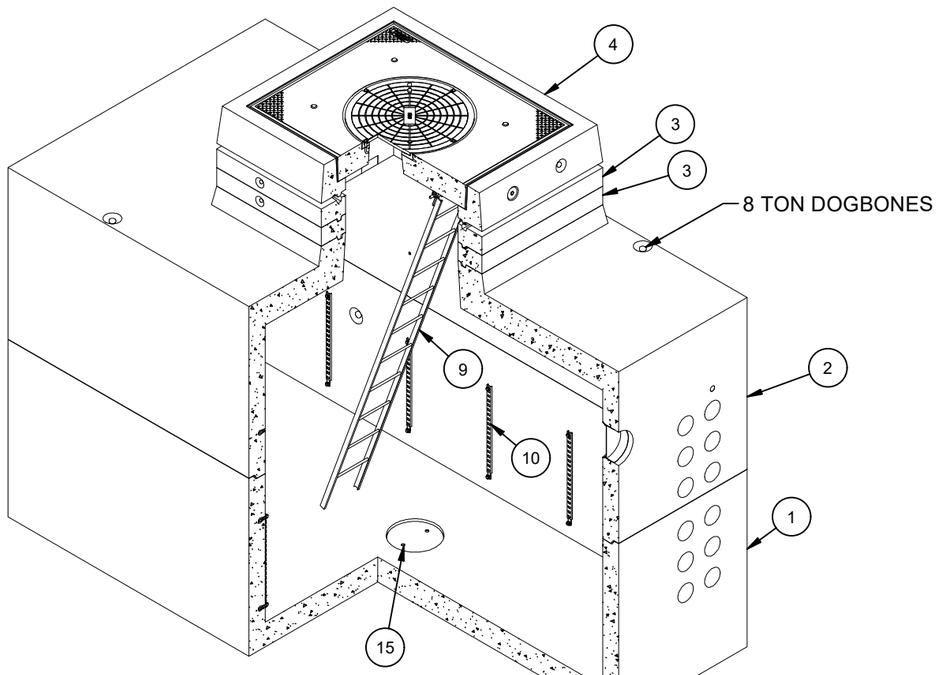

ISO VIEW

LIFTING NOTES
■ FIELD INSTALLATION: PLANT DEMOLDING: MINIMUM HANDLING CONCRETE STRENGTH F'c = 5500 PSI RIGGING EQUALIZER REQUIRED TO EQUALIZE LOAD TO 4 LIFTING POINTS WITH A SLING ANGLE BETWEEN 60° AND 90°

REVISION HISTORY			
REV	DESCRIPTION	DATE	APPROVED
D	UPDATED TERMS	5/12/2025	

BURY DEPTH:	1.5' - 4.0' to Top		
WATER LEVEL:	3.0'	APPROX. WEIGHT:	56367.37 Lbs
DESIGN SPEC:	ACI 318,ASTM C857	LOADING SPEC:	A-16 (AASHTO HS20-44)
AGENCY:	Moreno Valley	AGENCY SPEC:	MVEU-730A-0

Infrastructure
JENSEN
WWW.JENSENPRECAST.COM

©2025 Jensen Infrastructure - All rights reserved.
All materials appearing as Jensen Infrastructure documents and the like are proprietary work product and are protected under U.S. copyright and other laws.
Unless in conjunction with business conducted with Jensen Infrastructure any use of Jensen Infrastructure work product without express, written consent is prohibited, and recipient is prohibited from distributing any and all work product to non-approved third parties under penalty of civil action. This product shall only be produced in a Jensen Infrastructure facility.

DESCRIPTION: Vault Layout 84168x96 Terminators Sump 30"C Moreno Valley MVEU-730A-0 LAYOUT REVIEW			REV: D-1
PART NUMBER:	200070367	DRAWN BY:	J.Rivas
CREATED:	11/23/2022	MODIFIED:	5/12/2025
			SHEET: 1 OF 2

200070367.idw

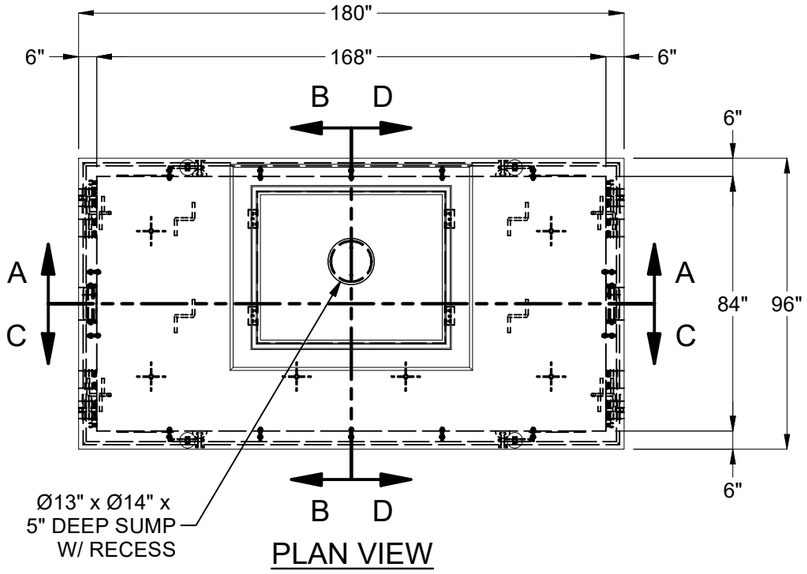

PLAN VIEW

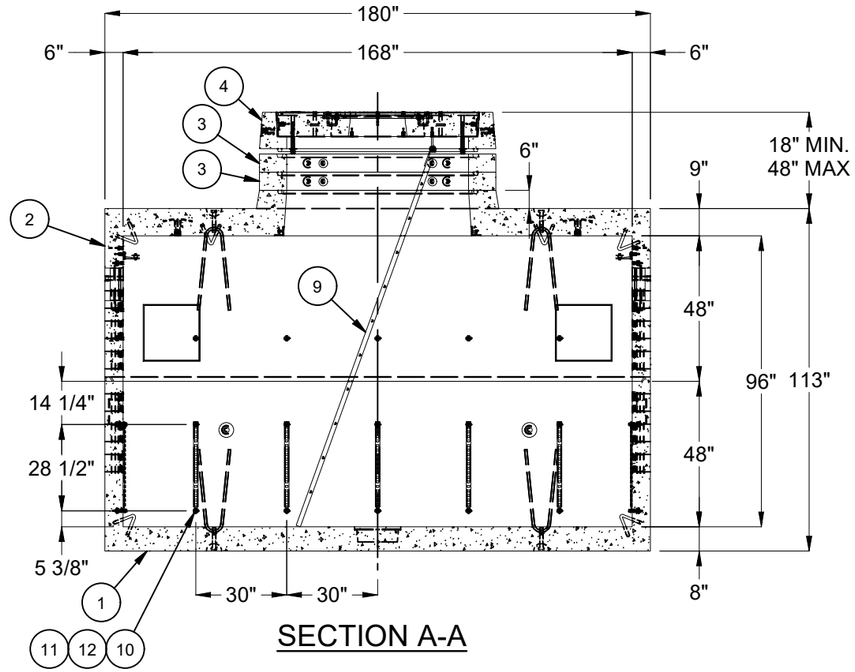

SECTION A-A

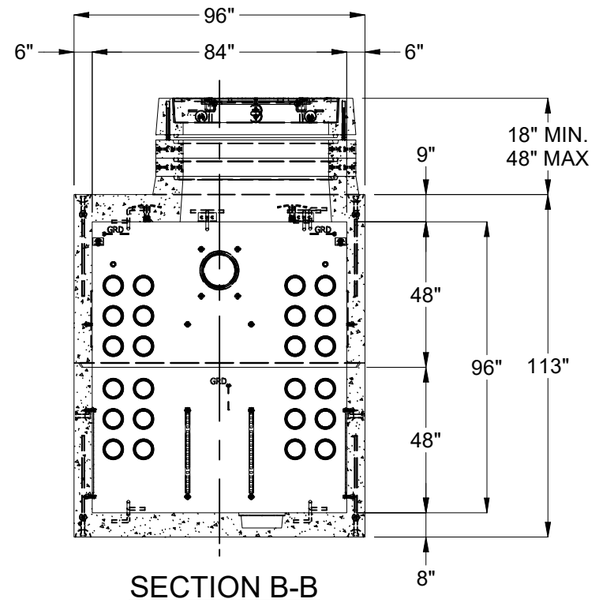

SECTION B-B

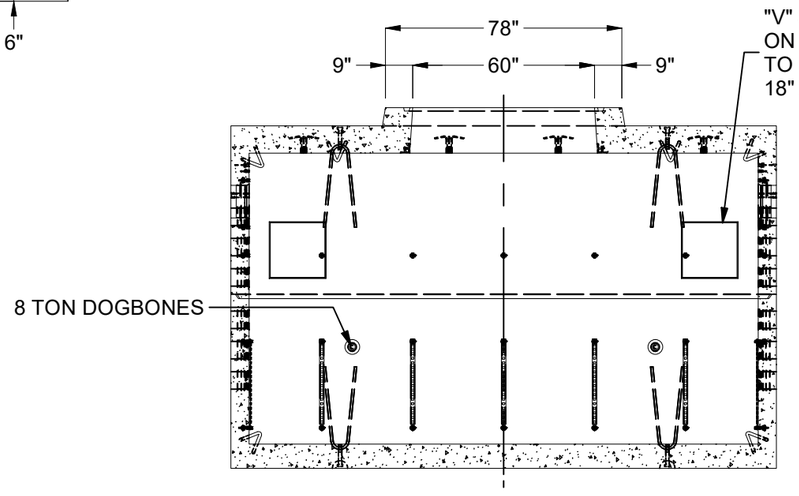

SECTION C-C

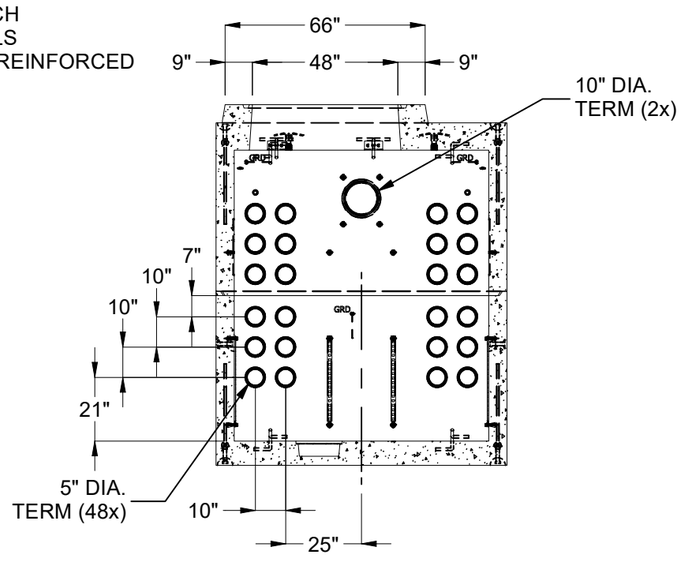

SECTION D-D

200070367.idw

BURY DEPTH:	1.5' - 4.0' to Top		
WATER LEVEL:	3.0'	APPROX. WEIGHT:	56367.37 Lbs
DESIGN SPEC:	ACI 318,ASTM C857	LOADING SPEC:	A-16 (AASHTO HS20-44)
AGENCY:	Moreno Valley	AGENCY SPEC:	MVEU-730A-0

Infrastructure
JENSEN
WWW.JENSENPRECAST.COM

©2025 Jensen Infrastructure - All rights reserved.
All materials appearing as Jensen Infrastructure documents and the like are proprietary work product and are protected under U.S. copyright and other laws.
Unless in conjunction with business conducted with Jensen Infrastructure any use of Jensen Infrastructure work product without express, written consent is prohibited, and recipient is prohibited from distributing any and all work product to non-approved third parties under penalty of civil action. This product shall only be produced in a Jensen Infrastructure facility.

DESCRIPTION:
Vault Layout 84168x96 Terminators Sump 30"C Moreno Valley MVEU-730A-0
LAYOUT DRAWING

PART NUMBER:	200070367	DRAWN BY:	J.Rivas
CREATED:	11/23/2022	MODIFIED:	5/12/2025

REV: D-1
SHEET: 2 OF 2