NOTES
■ FOR COMPLETE DESIGN AND PRODUCT INFORMATION CONTACT JENSEN PRECAST.

BILL OF MATERIALS

ITEM	UNIT QTY	QTY	PART NUMBER	DESCRIPTION
1	9.744 ft^3	9.744 ft^3	100011425	CONCRETE MIX GENERIC 5000 PSI
2	1	3	100004878	ANCHOR UTILITY .671DIA 5-SLAB GALV P75 5UA671
3	1	1	300151799	REINFORCING MAT 300151799
4	1	1	300151800	REINFORCING MAT 300151800

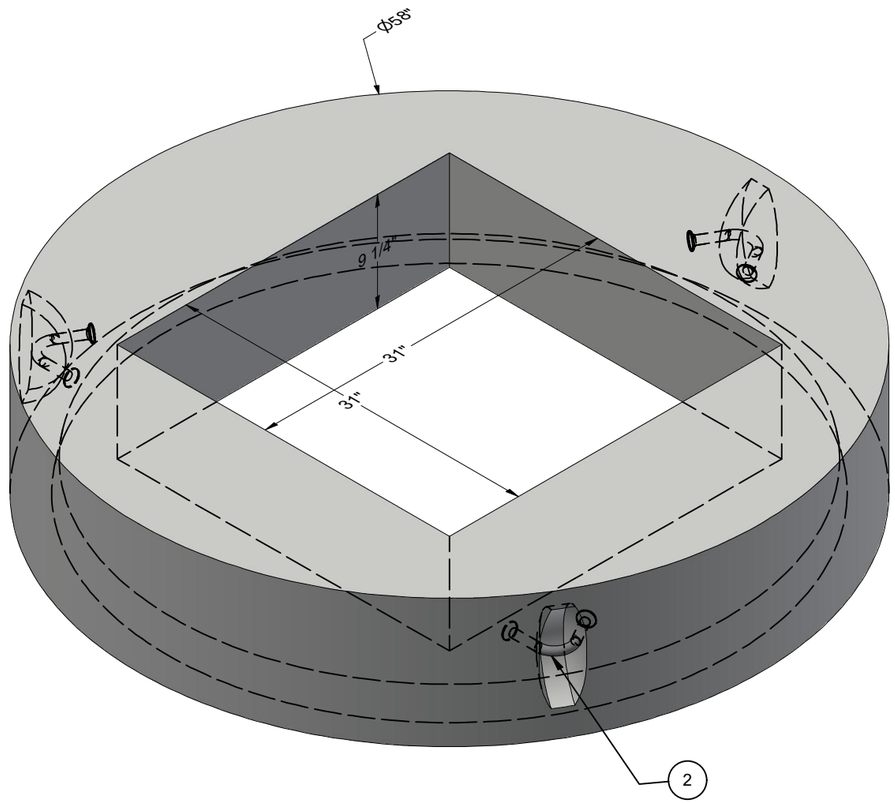

ISO REF

LIFTING NOTES
■ THIS CONCRETE PRODUCT IS DESIGNED TO BE LIFTED AT 2500 PSI WITH 3 LIFT CONNECTIONS EQUALLY LOADED TO 3 LIFTING POINTS AT A MINIMUM 60° SLING ANGLE, MEASURED FROM HORIZONTAL.

BURY DEPTH:	0.0' - 5.0' to Top		
WATER LEVEL:	0.0'	APPROX. WEIGHT:	1467.21 Lbs
DESIGN SPEC:	ASTM C890,ACI 318	LOADING SPEC:	A-16 (AASHTO HS20-44)
REINFORCEMENT TYPE:	Rebar	LIFTING TYPE:	A-Anchor

JENSEN PRECAST EST. 1968

WWW.JENSENPRECAST.COM

©2022 Jensen Precast- All rights reserved.
All materials appearing as Jensen Precast documents and the like are proprietary work product and are protected under U.S. copyright and other laws.
Unless in conjunction with business conducted with Jensen Precast, any use of Jensen Precast work product without express, written consent is prohibited, and recipient is prohibited from distributing any and all work product to non-approved third parties under penalty of civil action.

CHANGE HISTORY

NO.	DESCRIPTION	DATE	BY
1	2211-54546	11-21-22	JW

DESCRIPTION: Manhole D4858x12 Flat Top 31"x31"C

CASTING LAYOUT

REV: A-2

PART NUMBER:	200070296	DRAWN BY:	MLR
CREATED:	11/18/2022	MODIFIED:	11/21/2022

SHEET: 1 OF 2

200070296.idw

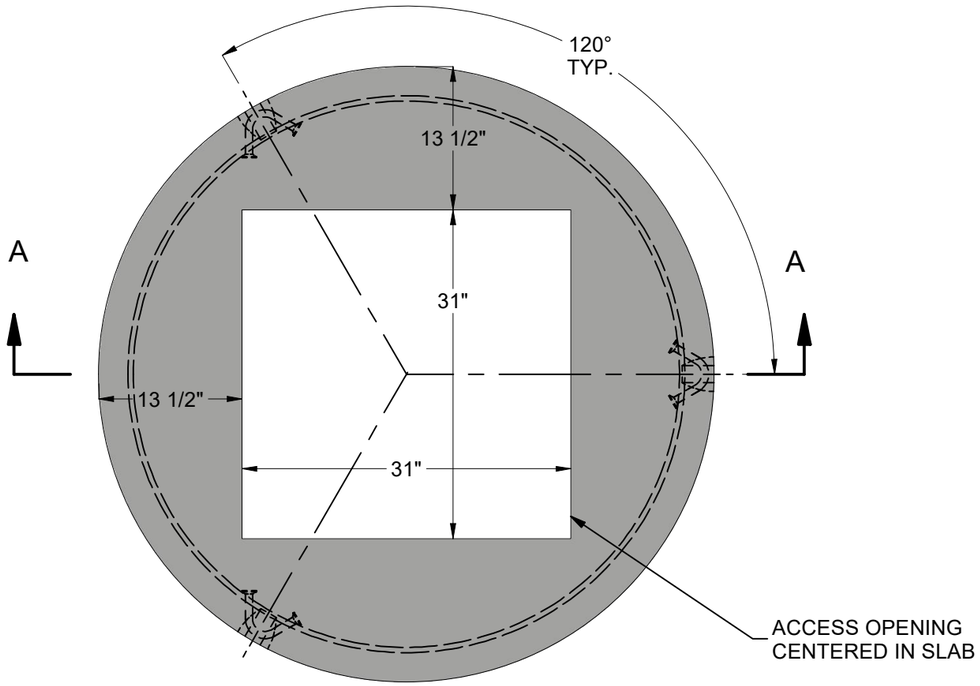

PLAN VIEW

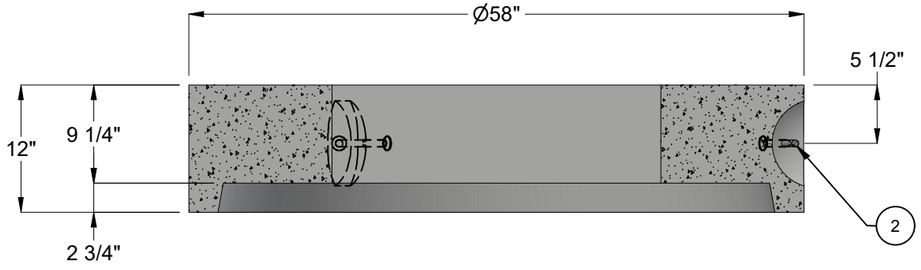

SECTION A-A

BURY DEPTH:	0.0' - 5.0' to Top		
WATER LEVEL:	0.0'	APPROX. WEIGHT:	1467.21 Lbs
DESIGN SPEC:	ASTM C890,ACI 318	LOADING SPEC:	A-16 (AASHTO HS20-44)
REINFORCEMENT TYPE:	Rebar	LIFTING TYPE:	A-Anchor

JENSEN PRECAST EST. 1968

WWW.JENSENPRECAST.COM

©2022 Jensen Precast- All rights reserved.
All materials appearing as Jensen Precast documents and the like are proprietary work product and are protected under U.S. copyright and other laws.
Unless in conjunction with business conducted with Jensen Precast, any use of Jensen Precast work product without express, written consent is prohibited, and recipient is prohibited from distributing any and all work product to non-approved third parties under penalty of civil action.

DESCRIPTION:	Manhole D4858x12 Flat Top 31"x31"C CASTING DRAWING		REV: A-2
PART NUMBER:	200070296	DRAWN BY:	MLR
CREATED:	11/18/2022	MODIFIED:	11/21/2022
			SHEET: 2 OF 2

200070296.idw