DESIGN NOTES
■ FOR COMPLETE DESIGN AND PRODUCT INFORMATION CONTACT JENSEN PRECAST.

BILL OF MATERIALS

ITEM	QTY	PART NUMBER	DESCRIPTION	WEIGHT (LBS)
1	1	200070154	Vault 4242x8 Slab Bottom Sump	1914.942
2	1	200070149	Riser 4242x36 Terminators,Slot	3048.617
3	1	100041631	Vault 4242x10 Slab Top 33"x33"C Cast-In Cover Marked "COC TRAFFIC SIGNAL"	1879.485

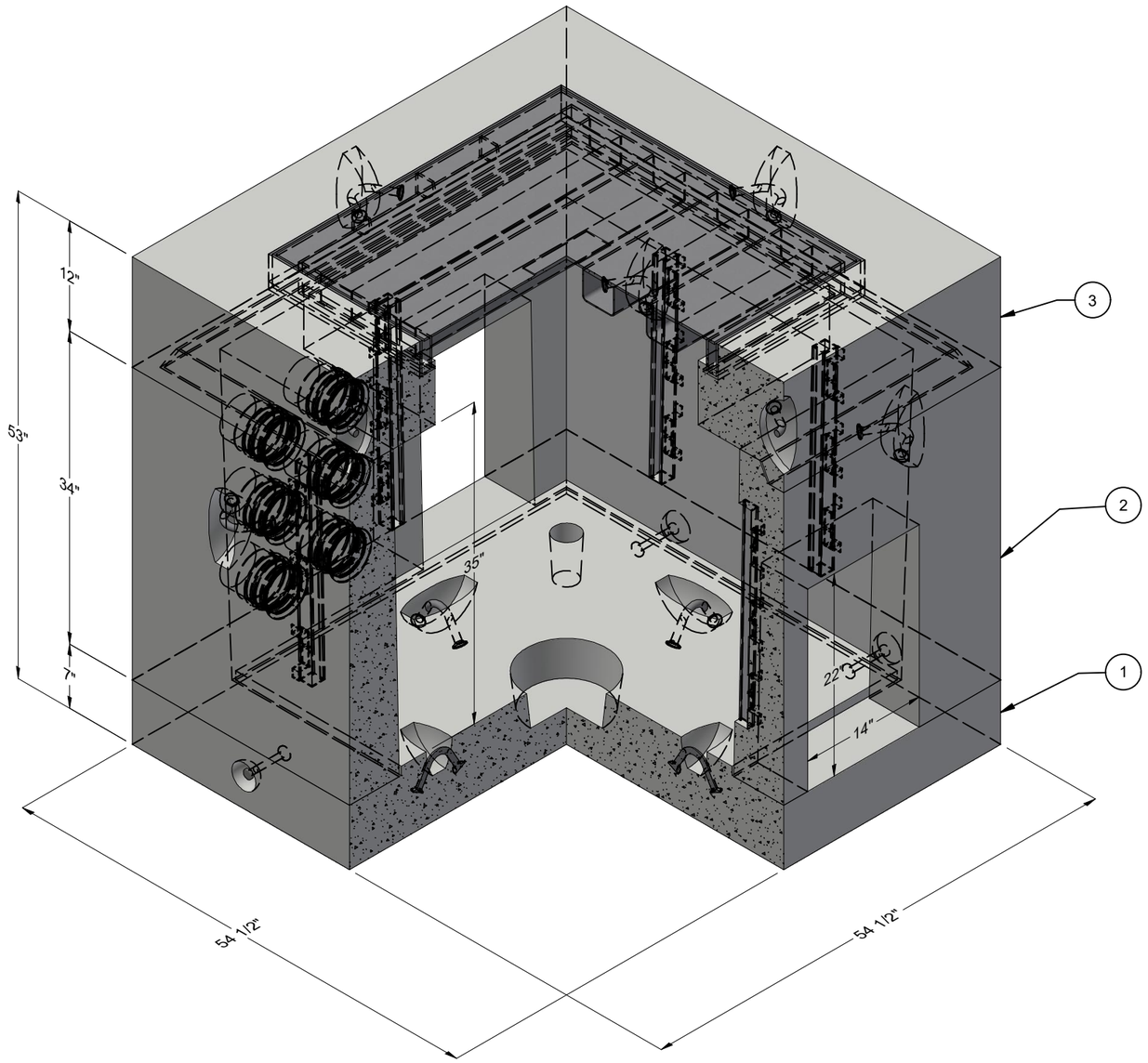

ISO REF

CHANGE HISTORY			
NO.	DESCRIPTION	DATE	BY
1	2211-54524	11-22-22	JW
2	BOM CHANGE	5-31-23	JW

BURY DEPTH:	0.0' - 0.0' to Top		
WATER LEVEL:	Below Structure	APPROX. WEIGHT:	6843.04 Lbs
DESIGN SPEC:	ACI 318,ASTM C857	LOADING SPEC:	A-16 (AASHTO HS20-44)
AGENCY:	Chandler	AGENCY SPEC:	C-103-3

JENSEN PRECAST EST. 1968

WWW.JENSENPRECAST.COM

©2023 Jensen Precast- All rights reserved.
All materials appearing as Jensen Precast documents and the like are proprietary work product and are protected under U.S. copyright and other laws.
Unless in conjunction with business conducted with Jensen Precast, any use of Jensen Precast work product without express, written consent is prohibited, and recipient is prohibited from distributing any and all work product to non-approved third parties under penalty of civil action.

DESCRIPTION:
Intercept Vault Layout 4242x35 33"x33"C Chandler C-103-3
LAYOUT REVIEW

REV: B-1

PART NUMBER:	200070148	DRAWN BY:	MLR
CREATED:	9/13/2022	MODIFIED:	5/31/2023

SHEET: 1 OF 2

200070148.idw

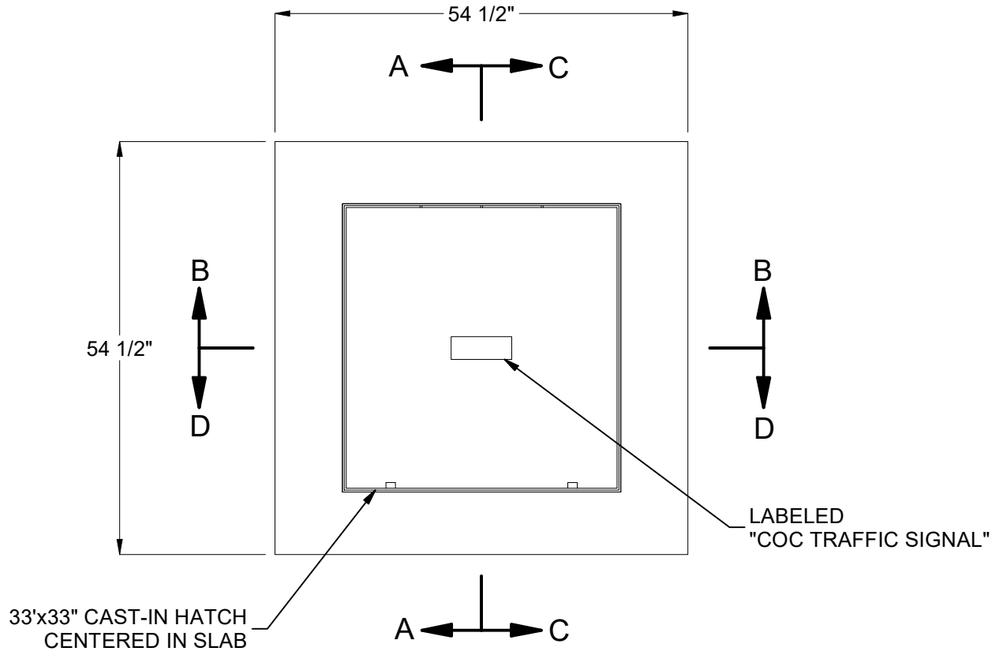

PLAN VIEW

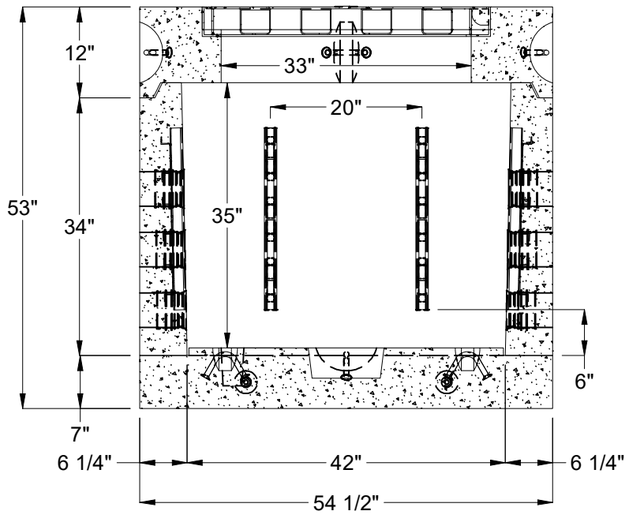

SECTION A-A

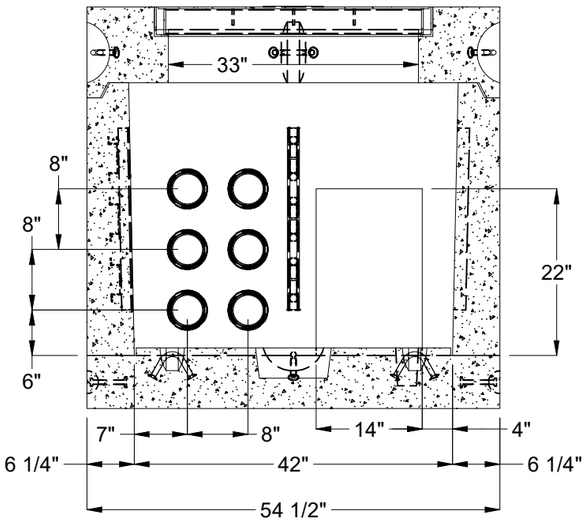

SECTION B-B

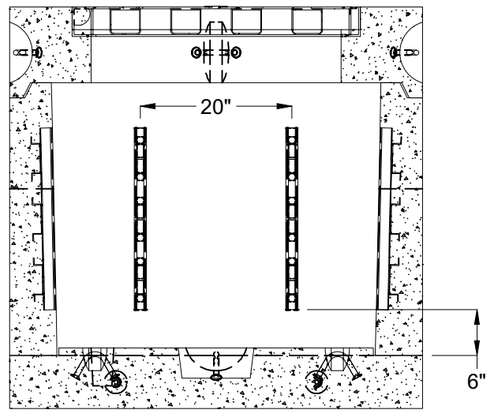

SECTION C-C

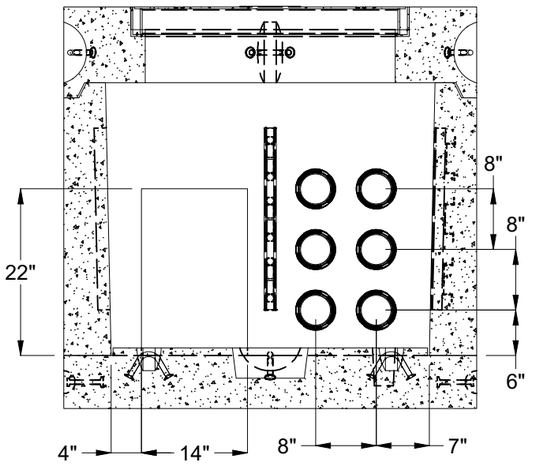

SECTION D-D

BURY DEPTH:	0.0' - 0.0' to Top		
WATER LEVEL:	Below Structure	APPROX. WEIGHT:	6843.04 Lbs
DESIGN SPEC:	ACI 318,ASTM C857	LOADING SPEC:	A-16 (AASHTO HS20-44)
AGENCY:	Chandler	AGENCY SPEC:	C-103-3

JENSEN PRECAST EST. 1968

WWW.JENSENPRECAST.COM

©2023 Jensen Precast- All rights reserved.
All materials appearing as Jensen Precast documents and the like are proprietary work product and are protected under U.S. copyright and other laws.
Unless in conjunction with business conducted with Jensen Precast, any use of Jensen Precast work product without express, written consent is prohibited, and recipient is prohibited from distributing any and all work product to non-approved third parties under penalty of civil action.

DESCRIPTION:	Intercept Vault Layout 4242x35 33"x33"C Chandler C-103-3 LAYOUT DRAWING		REV: B-1
PART NUMBER:	200070148	DRAWN BY:	MLR
CREATED:	9/13/2022	MODIFIED:	5/31/2023
			SHEET: 2 OF 2

200070148.idw