DESIGN NOTES
■ THIS PRODUCT MUST ONLY BE PRODUCED IN A JENSEN INFRASTRUCTURE FACILITY.
■ ALL CONCRETE MUST HAVE A 28 DAY COMPRESSIVE STRENGTH OF 5,500 PSI.
■ REINFORCING STEEL MUST COMPLY WITH ASTM A615 GRADE 60 OR ASTM A706 GRADE 60.
■ SEE TITLE BLOCK FOR BURY DEPTH RANGE, WATER TABLE LEVEL, AND DESIGN AND LOADING SPECIFICATIONS.
■ SOIL UNIT WEIGHT – 120 lbs/cu.ft.
■ EQUIVALENT LATERAL EARTH PRESSURE DRY: 36 lbs/cu.ft.
■ EQUIVALENT LATERAL EARTH PRESSURE WET: 80 lbs/cu.ft.
■ UNLESS OTHERWISE NOTED OR SPECIFIED THE STRUCTURE MUST BE INSTALLED PER "JENSEN PRECAST UNDERGROUND UTILITY STRUCTURES INSTALLATION PROCEDURE" FOUND AT https://www.jensenprecast.com/Utility-Structures-Installation-Instructions-d2595.pdf
■ DESIGNED PER CALCS. #31036
■ ALL PARTS TO BE STENCILED: MFG DATE / PRODUCT ID / WEIGHT.
■ COVER DESIGN FOR TRAFFIC LOADING.
■ MINIMUM EXCAVATION SIZE: 7'-0" X 12'-6" X DEPTH REQ'D.
■ VAULT TO BE PLACED ON A MIN. 6" BASE OF CRUSHER RUN FOR EASE OF INSTALLATION AND EVEN LOAD DISTRIBUTION.
■ CONCRETE MIX USED IN POURING THIS PRODUCT SHALL USE FLY ASH AS AN ADMIXTURE.
■ FINISH COATING: ALL INTERIOR WALLS AND CEILING SHALL BE PAINTED WHITE.

BILL OF MATERIALS

ITEM	UNIT QTY	QTY	PART NUMBER	DESCRIPTION	MASS (lb)
1	1	1	200019213	Vault 60126x42 Rect. Bottom Section Terminators Sump Edison UGS SS590	14509
2	1	1	200101333	Vault 60126x42 Rect. Top Section 36"C Terminators,Opening Edison UGS MH 310	14179
3	1	2	100012117	Grade Ring D3645x6	294
4	1	2	100002564	LADDER STEP RUNG 12B31 TYPE 1 MH KNURLED GALV 3/4X16	
5	1	1	100012643	Grade Ring D3645x12 Flat with Inserts	616
6	1	1	100009392	CI RING 30DIAX8IN NEENAH SWIVELOC NF-01502001	232
7	1	4	100009758	STUD BOLT 1/2X8 UNC LEVELING PLAIN	
8	1	8	100007007	HEX NUT 1/2-13 UNC HEAVY GALV	
9	1	8	100002657	WASHER FLAT 1/2 REGULAR TYPE A RAW	
10	1	1	100006925	CI COVER 30DIA NF R-1581-0174 ASTM A48 CL35B PH B/D MVU	200
11	1	4	100022412	PENTA BOLT 5/8-11 UNC 1-5/8 HD 304SS	
12	1	1	100008122	PLUG PICKHOLE NEOPRENE RUBBER CI COVER ED/LA	
13	1	4	100022758	GROUND ANCHOR BRACKET KIT HALO HB304R	
14	1	4	100004320	BOLT HEX 1/2-13 UNC 1 304SS	
15	1	1	100006783	SUMP COVER FOR 13"SUMP(15"OD)GALV DIA PLATE	
16	1	1	100009254	LADDER HOOKED GALV 9FT ED/LA I3382	
17	2.000 gal	2.000 gal	100006420	COATING PAINT LATEX WHITE	
18	1.000 ul	1.000 ul	100005749	SEALANT JOINT BUTYL RUBBER ASTM C-990 AND M198 CS-102 1IN EQUIV X14.5FT PER BOX 118FT	

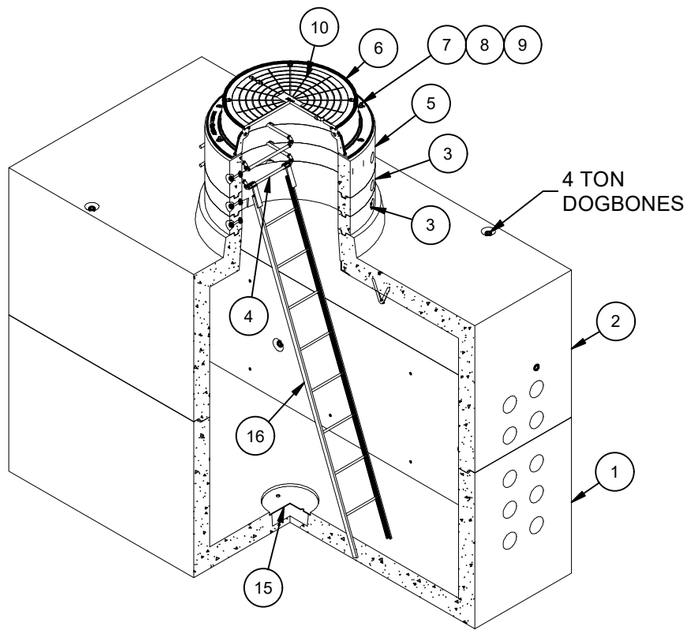

ISOMETRIC VIEW

LIFTING NOTES
■ FIELD INSTALLATION: PLANT DEMOLDING: MINIMUM HANDLING CONCRETE STRENGTH F'c = 5500 PSI RIGGING EQUALIZER REQUIRED TO EQUALIZE LOAD TO 4 LIFTING POINTS WITH A SLING ANGLE BETWEEN 60° AND 90°

REVISION HISTORY			
REV	DESCRIPTION	DATE	APPROVED
B	UPDATED TERMS	5/12/2025	

BURY DEPTH:	1.5' - 4.0' to Top		
WATER LEVEL:	3.0'	APPROX. WEIGHT:	30379.73 Lbs
DESIGN SPEC:	ACI 318,ASTM C857	LOADING SPEC:	A-16 (AASHTO HS20-44)
AGENCY:	Moreno Valley	AGENCY SPEC:	MVEU-728A-0

Infrastructure
JENSEN
WWW.JENSENPRECAST.COM

©2025 Jensen Infrastructure - All rights reserved.
All materials appearing as Jensen Infrastructure documents and the like are proprietary work product and are protected under U.S. copyright and other laws.
Unless in conjunction with business conducted with Jensen Infrastructure any use of Jensen Infrastructure work product without express, written consent is prohibited, and recipient is prohibited from distributing any and all work product to non-approved third parties under penalty of civil action. This product shall only be produced in a Jensen Infrastructure facility.

DESCRIPTION:	Vault Layout 60126x84 Terminators Sump 30"C Moreno Valley MVEU-728A-0 Int. Paint - White Latex LAYOUT REVIEW		REV: B-1
PART NUMBER:	200070108	DRAWN BY:	J.Rivas
CREATED:	11/10/2022	MODIFIED:	5/12/2025
			SHEET: 1 OF 2

200070108.idw

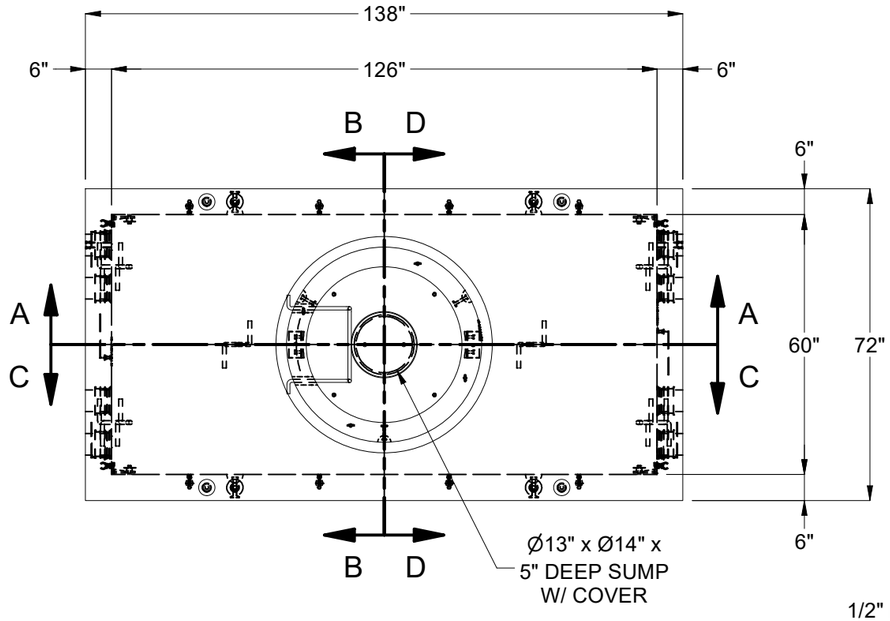

PLAN VIEW
(COVER NOT SHOWN FOR CLARITY)

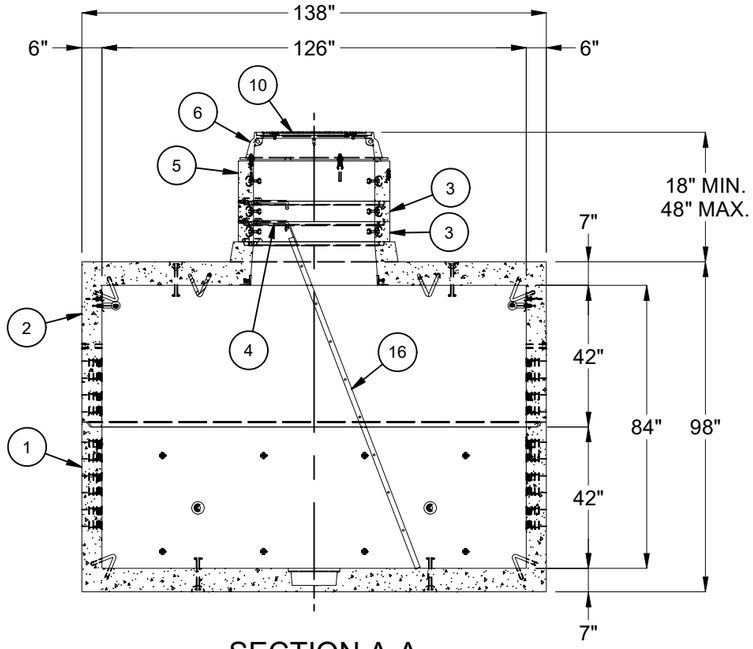

SECTION A-A

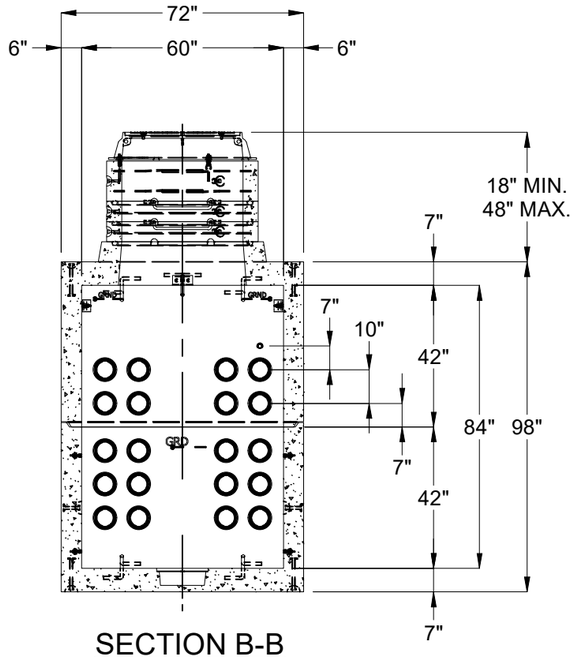

SECTION B-B

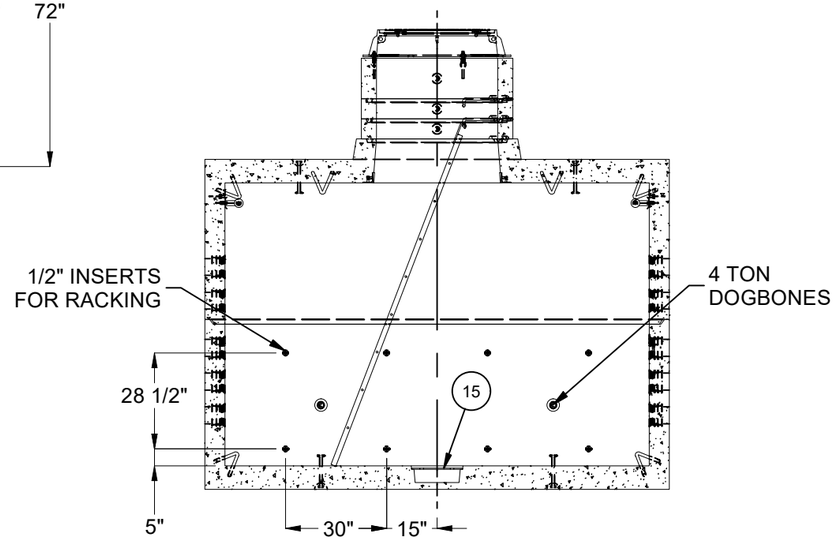

SECTION C-C

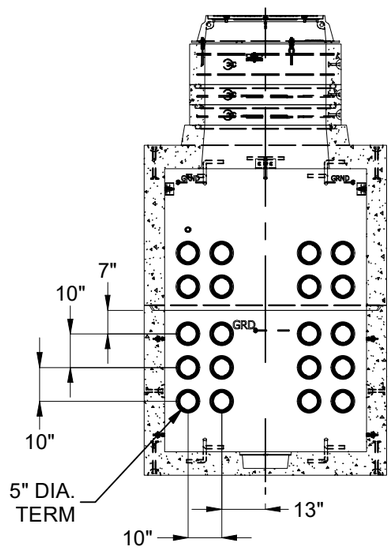

SECTION D-D

BURY DEPTH:	1.5' - 4.0' to Top		
WATER LEVEL:	3.0'	APPROX. WEIGHT:	30379.73 Lbs
DESIGN SPEC:	ACI 318,ASTM C857	LOADING SPEC:	A-16 (AASHTO HS20-44)
AGENCY:	Moreno Valley	AGENCY SPEC:	MVEU-728A-0

Infrastructure
JENSEN
WWW.JENSENPRECAST.COM

©2025 Jensen Infrastructure - All rights reserved.
All materials appearing as Jensen Infrastructure documents and the like are proprietary work product and are protected under U.S. copyright and other laws.
Unless in conjunction with business conducted with Jensen Infrastructure any use of Jensen Infrastructure work product without express, written consent is prohibited, and recipient is prohibited from distributing any and all work product to non-approved third parties under penalty of civil action. This product shall only be produced in a Jensen Infrastructure facility.

DESCRIPTION:	Vault Layout 60126x84 Terminators Sump 30"C Moreno Valley MVEU-728A-0 Int. Paint - White Latex LAYOUT DRAWING		REV: B-1
PART NUMBER:	200070108	DRAWN BY:	J.Rivas
CREATED:	11/10/2022	MODIFIED:	5/12/2025
			SHEET: 2 OF 2

200070108.idw