DESIGN NOTES
■ DESIGNED IN ACCORDANCE WITH AASHTO HS20-44 TRAFFIC BRIDGE LOADING USING 5,500 PSI COMPRESSIVE STRENGTH CONCRETE AND 60,000 PSI YIELD STRENGTH ASTM A-706 STEEL REINFORCEMENT PER CALCS. #31649.
■ MINIMUM EXCAVATION SIZE: 7'-6" X 12'-6" X DEPTH REQ'D.
■ COVER DESIGN LOAD FOR 5000 LBS SINGLE AXLE ON 10" X 10" AREA.
■ TEMP. PAD DESIGNED FOR 300 PSF.
■ VAULT TO BE PLACED ON A MIN. 6" BASE OF CRUSHER RUN FOR EASE OF INSTALLATION AND EVEN LOAD DISTRIBUTION.
■ CONCRETE MIX USED IN POURING THIS PRODUCT SHALL USE FLY ASH AS AN ADMIXTURE.
■ FINISH COATING: ALL INTERIOR WALLS AND CEILING SHALL BE PAINTED WHITE.
■ ALL PARTS TO BE STENCILED: MFG DATE / JOB NUMBER / PRODUCT ID / WEIGHT.
■ FOR COMPLETE DESIGN AND PRODUCT INFORMATION CONTACT JENSEN PRECAST.

BILL OF MATERIALS

ITEM	UNIT QTY	QTY	PART NUMBER	DESCRIPTION	MASS (lb)
1	1	1	200019213	Vault 60126x42 Rect. Bottom Section Terminators Sump Edison UGS SS590	14509
2	1	1	100012367	Vault 60126x42 Rect. Top Section 30"E, 60"x61"E Edison UGS SS590	12365
3	1	1	100012274	Temporary Cover Pad 6969x4 EDISON UGS SS590	1928
4	1	1	100006768	650 PMH STEEL ADAPTER PLATE	55
5	1	2	100007121	SCREW FLAT SLOTTED 3/8-16 UNC 1 304SS	
6	1	1	100007022	COVER 30DIA RPM 1106 MVU	60
7	1	4	100008106	PENTA BOLT 5/8X1-1/2 W/CAPWASH	
8	1	6	100004043	BOLT HEX 1/2-13 UNC 1.5 316SS	
9	1	4	100022758	GROUND ANCHOR BRACKET KIT HALO HB304R	
10	1	4	100004023	BOLT HEX 1/2-13 UNC 1 316SS	
11	1	1	100006783	SUMP COVER FOR 13IN GALV DIA PLATE	
12	2.000 gal	2.000 gal	100006420	COATING PAINT LATEX WHITE	
13	1.000 ul	1.000 ul	100005749	SEALANT JOINT BUTYL RUBBER ASTM C-990 AND M198 CS-102 1IN EQUIV X14.5FT PER BOX 118FT	

200070097.idw

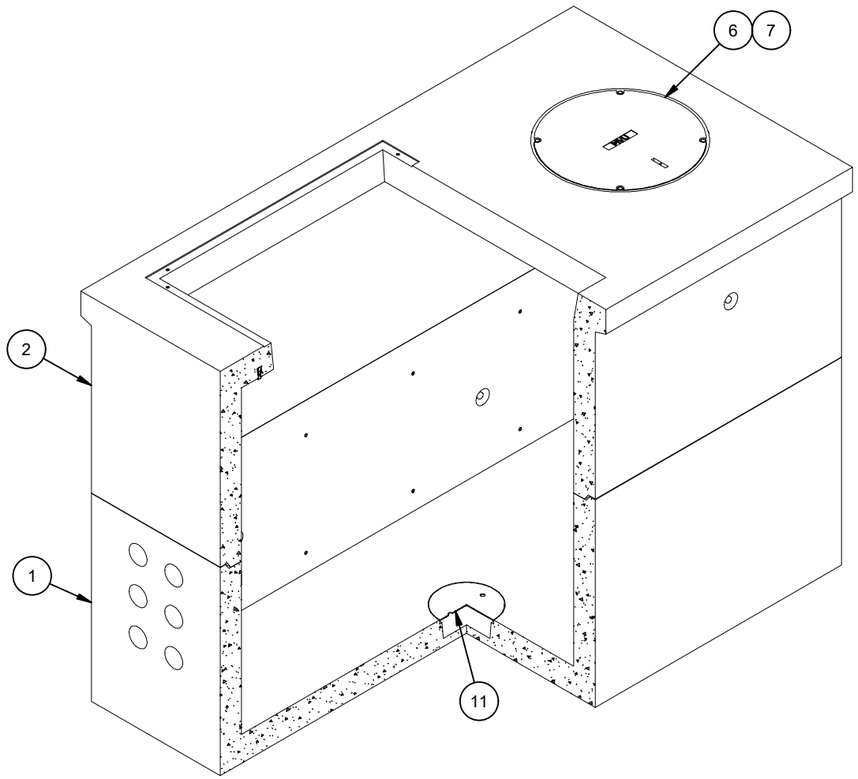

ISOMETRIC VIEW

LIFTING NOTES
■ FIELD INSTALLATION: PLANT DEMOLDING: MINIMUM HANDLING CONCRETE STRENGTH F'c = 5500 PSI RIGGING EQUALIZER REQUIRED TO EQUALIZE LOAD TO 4 LIFTING POINTS WITH A SLING ANGLE BETWEEN 60° AND 90°

REVISION HISTORY			
REV	DESCRIPTION	DATE	APPROVED
A-3	INITIAL RELEASE	11/15/2024	

BURY DEPTH:	-0.3' - 0.0' to Top		
WATER LEVEL:	3.0'	APPROX. WEIGHT:	28940.14 Lbs
DESIGN SPEC:	ACI 318,ASTM C857	LOADING SPEC:	A-03 (300 psf)
AGENCY:	Moreno Valley	AGENCY SPEC:	MVEU-718-0

JENSEN PRECAST EST. 1968

WWW.JENSENPRECAST.COM

©2024 Jensen Precast- All rights reserved.
All materials appearing as Jensen Precast documents and the like are proprietary work product and are protected under U.S. copyright and other laws.
Unless in conjunction with business conducted with Jensen Precast, any use of Jensen Precast work product without express, written consent is prohibited, and recipient is prohibited from distributing any and all work product to non-approved third parties under penalty of civil action.

DESCRIPTION:	Vault Layout 60126x84 Terminators Sump 30"E Moreno Valley MVEU-718-0 Int. Paint - White Latex LAYOUT REVIEW		REV: A-2
PART NUMBER:	200070097	DRAWN BY:	J. Prado
CREATED:	11/9/2022	MODIFIED:	11/15/2024
			SHEET: 1 OF 2

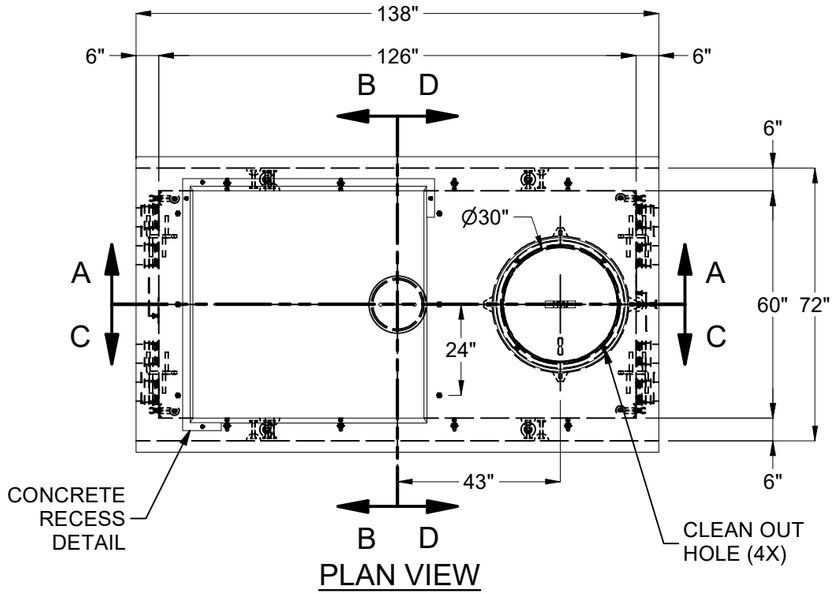

PLAN VIEW

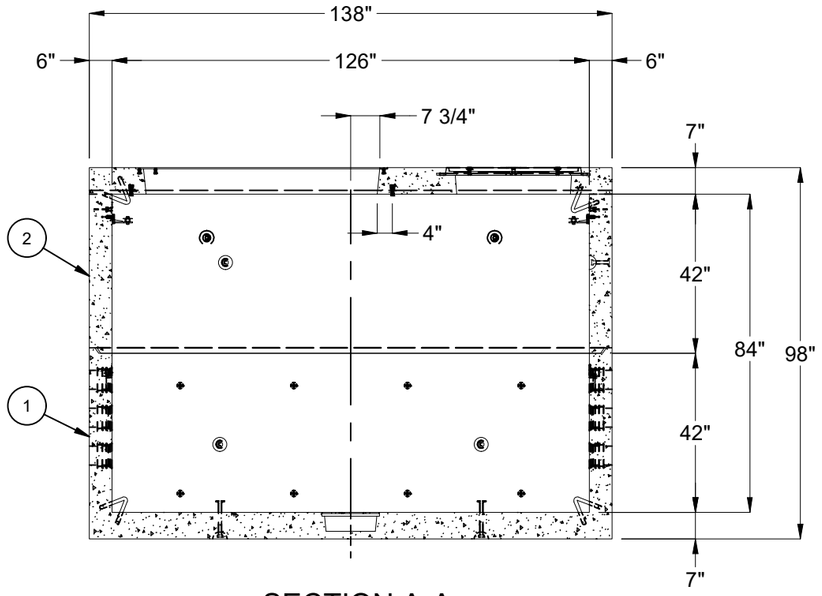

SECTION A-A

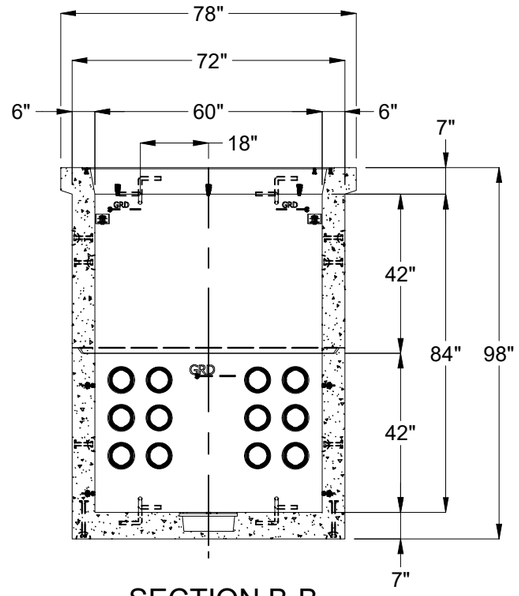

SECTION B-B

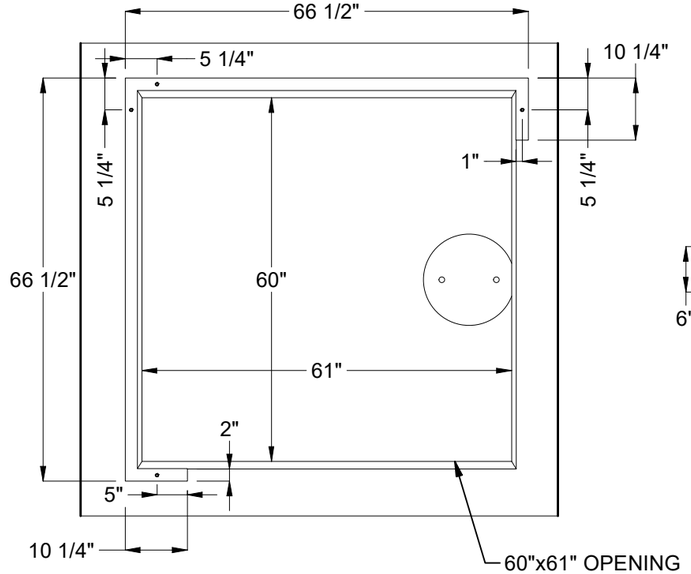

CONCRETE RECESS DETAIL

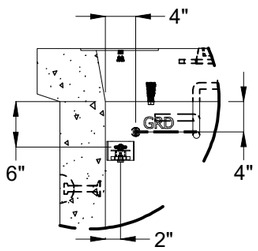

DETAIL E

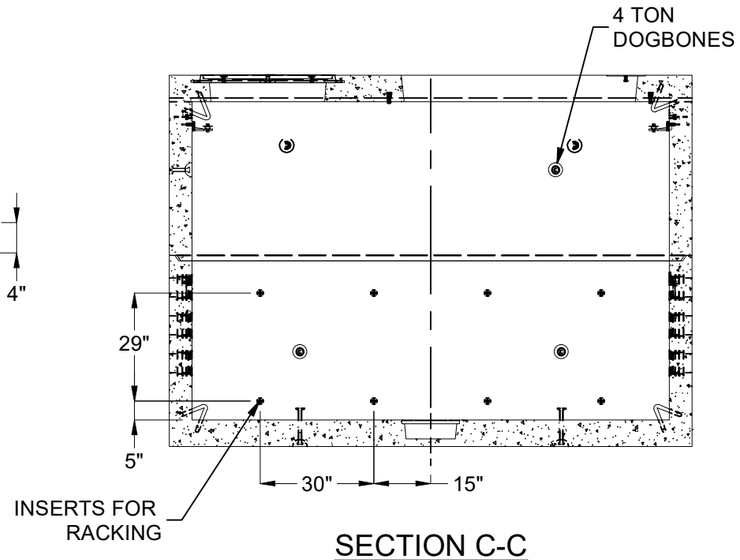

SECTION C-C

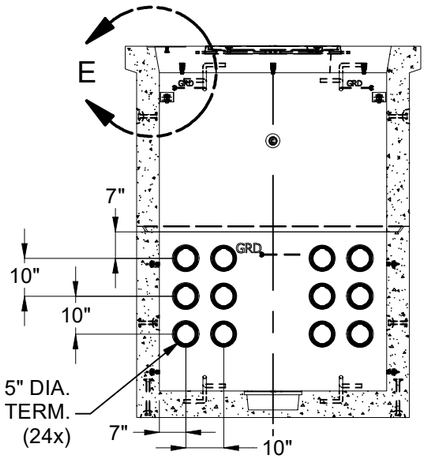

SECTION D-D

BURY DEPTH:	-0.3' - 0.0' to Top		
WATER LEVEL:	3.0'	APPROX. WEIGHT:	28940.14 Lbs
DESIGN SPEC:	ACI 318,ASTM C857	LOADING SPEC:	A-03 (300 psf)
AGENCY:	Moreno Valley	AGENCY SPEC:	MVEU-718-0

JENSEN PRECAST EST. 1968

WWW.JENSENPRECAST.COM

©2024 Jensen Precast- All rights reserved.
All materials appearing as Jensen Precast documents and the like are proprietary work product and are protected under U.S. copyright and other laws.
Unless in conjunction with business conducted with Jensen Precast, any use of Jensen Precast work product without express, written consent is prohibited, and recipient is prohibited from distributing any and all work product to non-approved third parties under penalty of civil action.

DESCRIPTION:	Vault Layout 60126x84 Terminators Sump 30"E Moreno Valley MVEU-718-0 Int. Paint - White Latex		REV: A-2
	LAYOUT DRAWING		
PART NUMBER:	200070097	DRAWN BY:	J. Prado
CREATED:	11/9/2022	MODIFIED:	11/15/2024

SHEET: 2 OF 2

200070097.idw