BILL OF MATERIALS

ITEM	UNIT QTY	QTY	PART NUMBER	DESCRIPTION
1	1	1	100012313	Vault 4884x42 Rect. Bottom Section Thinwall ED/AN/RP/AZ UGS SS530, SB-2
2	1	1	200015165	Pad 96120x8 EDISON UGS SS530
3	1	1	100007043	COVER 3048 POLYMER MVU
4	1	6	100008105	PENTA BOLT 1/2-13 UNC 2-1/2 304SS W/CAPWASH
5	1.000 ul	1.000 ul	100005749	SEALANT JOINT BUTYL RUBBER ASTM C-990 AND M198 CS-102 1IN EQUIV X14.5FT PER BOX 118FT

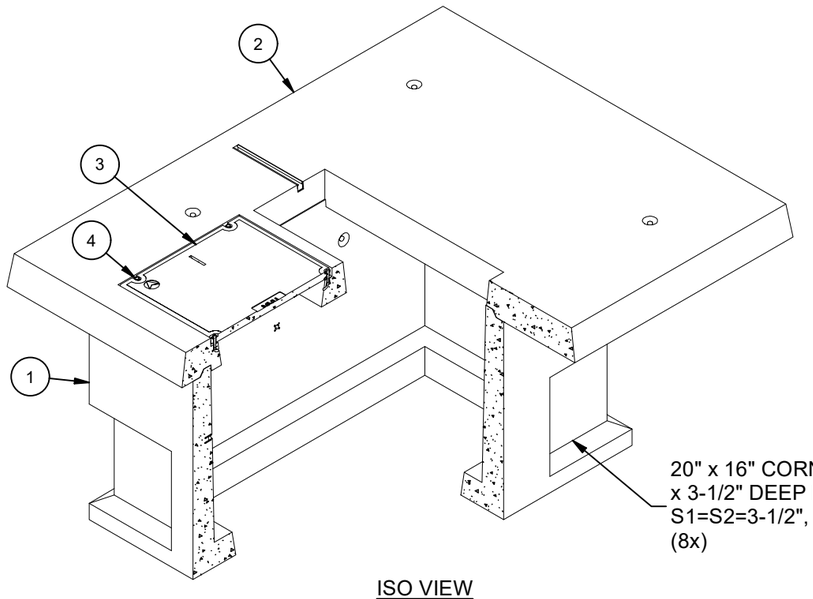

ISO VIEW

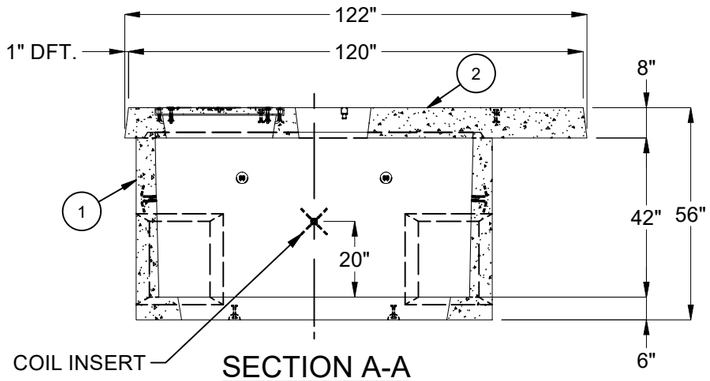

SECTION A-A

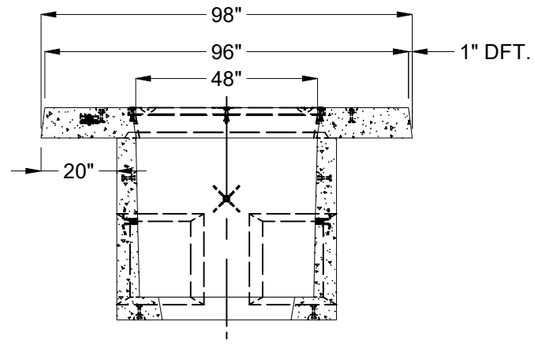

SECTION B-B

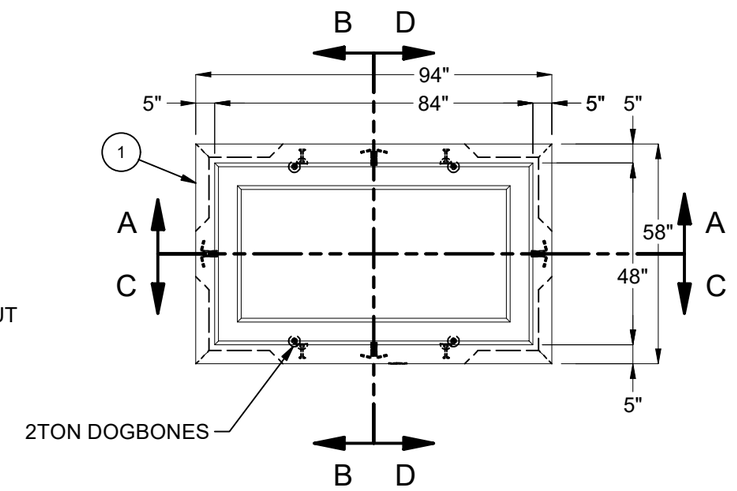

PLAN VIEW W/O EQUIPMENT PAD

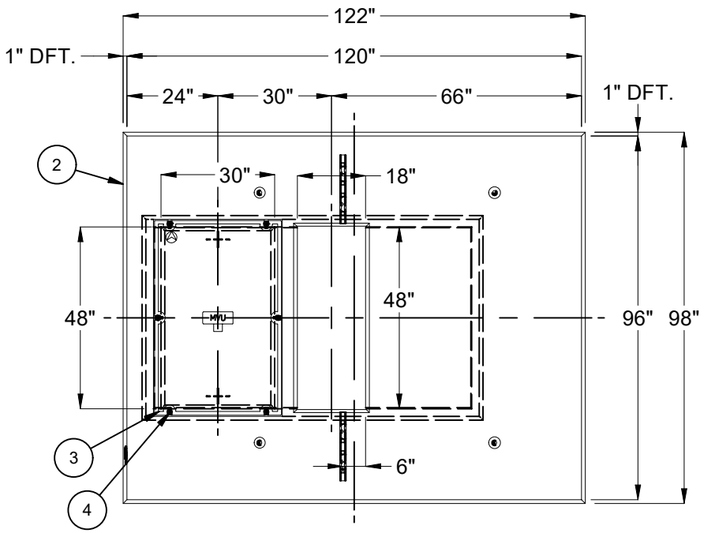

PLAN VIEW OF EQUIPMENT PAD

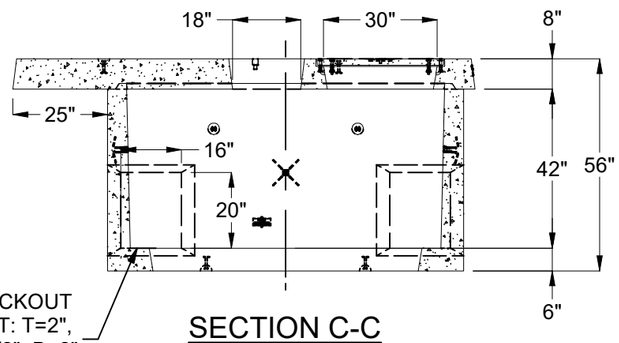

SECTION C-C

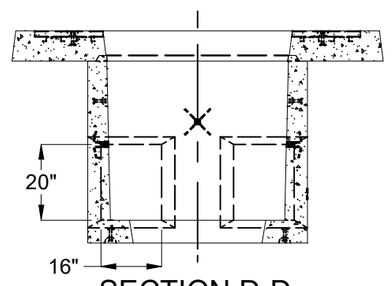

SECTION D-D

DESIGN NOTES
■ DESIGNED IN ACCORDANCE WITH AASHTO HS20-44 TRAFFIC BRIDGE LOADING USING 5,500 PSI COMPRESSIVE STRENGTH CONCRETE AND 60,000 PSI YIELD STRENGTH ASTM A-706 STEEL REINFORCEMENT PER CALCS.. #31654.
■ PAD CONCRETE LOAD DESIGNATION A-0.3 (300 PSF) PARKWAY LOADING/30,000 LB TRANSFORMER.
■ COVER DESIGN FOR PARKWAY LOADING (300 PSF).
■ MINIMUM EXCAVATION SIZE: 5'-10" X 8'-10" X DEPTH REQ'D.
■ VAULT TO BE PLACED ON A MIN. 6" BASE OF CRUSHER RUN FOR EASE OF INSTALLATION AND EVEN LOAD DISTRIBUTION.
■ ALL PARTS TO BE STENCILED: MFG DATE / JOB NUMBER / PRODUCT ID / WEIGHT.
■ FOR COMPLETE DESIGN AND PRODUCT INFORMATION CONTACT JENSEN PRECAST.
LIFTING NOTES
■ FIELD INSTALLATION: PLANT DEMOLDING: MINIMUM HANDLING CONCRETE STRENGTH F'c = 5500 PSI RIGGING EQUALIZER REQUIRED TO EQUALIZE LOAD TO 4 LIFTING POINTS WITH A SLING ANGLE BETWEEN 60° AND 90°

BURY DEPTH:	-0.3' - 0.3' to Top		
WATER LEVEL:	3.0'	WEIGHT:	12859.79 Lbs
DESIGN SPEC:	ASTM C857,ACI 318	LOADING SPEC:	A-03 (300 psf)
AGENCY:	CITY OF MORENO VALLEY	AGENCY SPEC:	MVEU-715-0

JENSEN PRECAST EST. 1968

WWW.JENSENPRECAST.COM

©2022 Jensen Precast- All rights reserved.
All materials appearing as Jensen Precast documents and the like are proprietary work product and are protected under U.S. copyright and other laws.
Unless in conjunction with business conducted with Jensen Precast, any use of Jensen Precast work product without express, written consent is prohibited, and recipient is prohibited from distributing any and all work product to non-approved third parties under penalty of civil action.

REVISION HISTORY

REV	DESCRIPTION	DATE	APPROVED
A-1	INITIAL RELEASE	11/8/2022	

DESCRIPTION:	KIT,8X10X42 SLAB BOX, CITY OF MORENO VALLEY MVEU-715-0 LAYOUT REVIEW		REV: A-1
PART NUMBER:	200070058	DRAWN BY: F.Corpus	SHEET: 1 OF 1
CREATED:	11/8/2022	MODIFIED: 11/8/2022	

200070058.idw