DESIGN NOTES
■ THIS PRODUCT MUST ONLY BE PRODUCED IN A JENSEN INFRASTRUCTURE FACILITY.
■ ALL CONCRETE MUST HAVE A 28 DAY COMPRESSIVE STRENGTH OF 5,500 PSI.
■ REINFORCING STEEL MUST COMPLY WITH ASTM A615 GRADE 60 OR ASTM A706 GRADE 60.
■ SEE TITLE BLOCK FOR BURY DEPTH RANGE, WATER TABLE LEVEL, AND DESIGN AND LOADING SPECIFICATIONS.
■ SOIL UNIT WEIGHT – 120 lbs/cu.ft.
■ EQUIVALENT LATERAL EARTH PRESSURE DRY: 36 lbs/cu.ft.
■ EQUIVALENT LATERAL EARTH PRESSURE WET: 80 lbs/cu.ft.
■ UNLESS OTHERWISE NOTED OR SPECIFIED THE STRUCTURE MUST BE INSTALLED PER "JENSEN PRECAST UNDERGROUND UTILITY STRUCTURES INSTALLATION PROCEDURE" FOUND AT https://www.jensenprecast.com/Utility-Structures-Installation-Instructions-d2595.pdf
■ DESIGNED PER CALCS. #31654
■ ALL PARTS TO BE STENCILED: MFG DATE / PRODUCT ID / WEIGHT.
■ COVER DESIGN FOR 300 PSF PEDESTRIAN LOADING.
■ MINIMUM EXCAVATION SIZE: 5'-10" X 9'-0" X DEPTH REQ'D.
■ VAULT TO BE PLACED ON A MIN. 6” BASE OF CRUSHER RUN FOR EASE OF INSTALLATION AND EVEN LOAD DISTRIBUTION.

BILL OF MATERIALS

ITEM	UNIT QTY	QTY	PART NUMBER	DESCRIPTION	MASS (lb)
1	1	1	100012313	Vault 4884x42 Rect. Bottom Section Thinwall ED/AN/RP/AZ UGS SS530, SB-2	6265
2	1	1	100012277	Pad 72102x6 EDISON UGS SS530, SB-1	2632
3	1	1	100007043	COVER 3048 POLYMER MVU	190
4	1	6	100008105	PENTA BOLT 1/2-13 UNC 2-1/2 304SS W/CAPWASH	
5	1.000 ul	1.000 ul	100005749	SEALANT JOINT BUTYL RUBBER ASTM C-990 AND M198 CS-102 1IN EQUIV X14.5FT PER BOX 118FT	

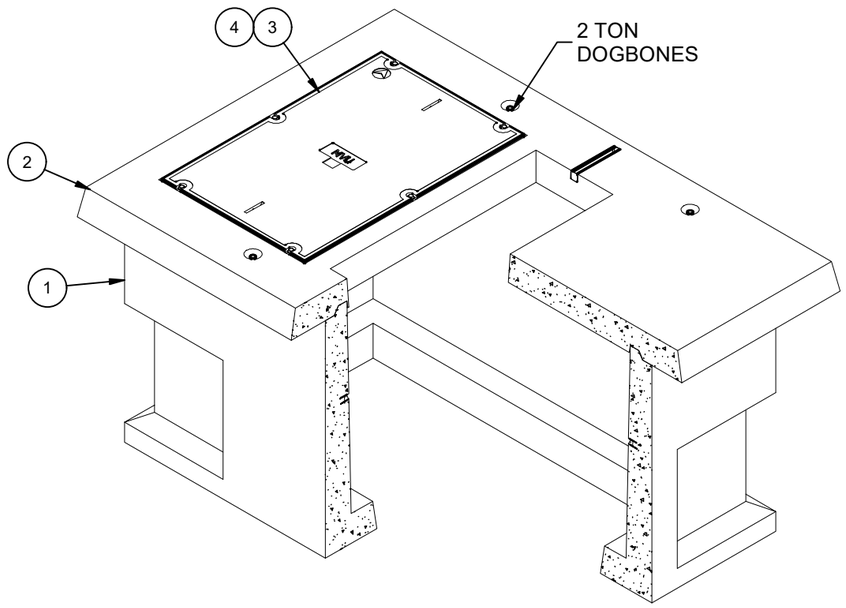

ISOMETRIC VIEW

LIFTING NOTES
■ FIELD INSTALLATION: PLANT DEMOLDING: MINIMUM HANDLING CONCRETE STRENGTH F'c = 5500 PSI RIGGING EQUALIZER REQUIRED TO EQUALIZE LOAD TO 4 LIFTING POINTS WITH A SLING ANGLE BETWEEN 60° AND 90°

BURY DEPTH:	-0.3' - 0.3' to Top		
WATER LEVEL:	Below Structure	APPROX. WEIGHT:	9088.13 Lbs
DESIGN SPEC:	ACI 318,ASTM C857	LOADING SPEC:	A-03 (300 psf)
AGENCY:	Moreno Valley	AGENCY SPEC:	MVEU-714-0

Infrastructure
JENSEN
WWW.JENSENPRECAST.COM

©2025 Jensen Infrastructure - All rights reserved.
All materials appearing as Jensen Infrastructure documents and the like are proprietary work product and are protected under U.S. copyright and other laws.
Unless in conjunction with business conducted with Jensen Infrastructure any use of Jensen Infrastructure work product without express, written consent is prohibited, and recipient is prohibited from distributing any and all work product to non-approved third parties under penalty of civil action. This product shall only be produced in a Jensen Infrastructure facility.

REVISION HISTORY			
REV	DESCRIPTION	DATE	APPROVED
A-2	INITIAL RELEASE	6/10/2025	

DESCRIPTION: Slab Box Layout 4884x42 Knockout 30"x48"E Moreno Valley MVEU-714-0 LAYOUT REVIEW			REV: A-1
PART NUMBER:	200070053	DRAWN BY: J. Prado	SHEET: 1 OF 2
CREATED:	11/8/2022	MODIFIED: 6/10/2025	

200070053.idw

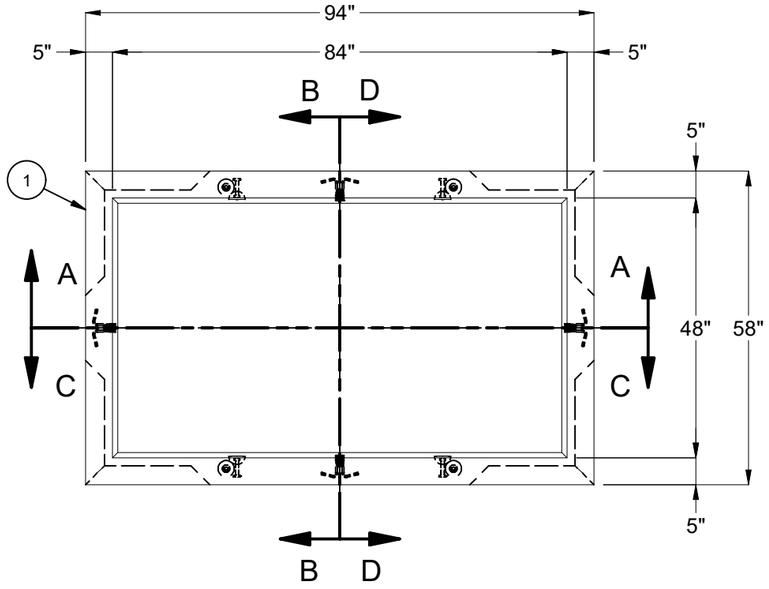

PLAN VIEW
(W/ OUT EQUIPMENT PAD)

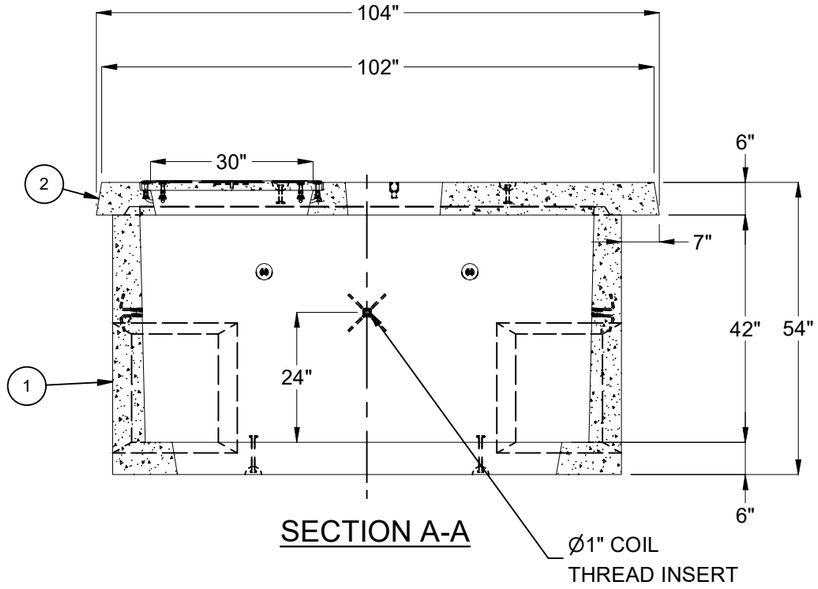

SECTION A-A

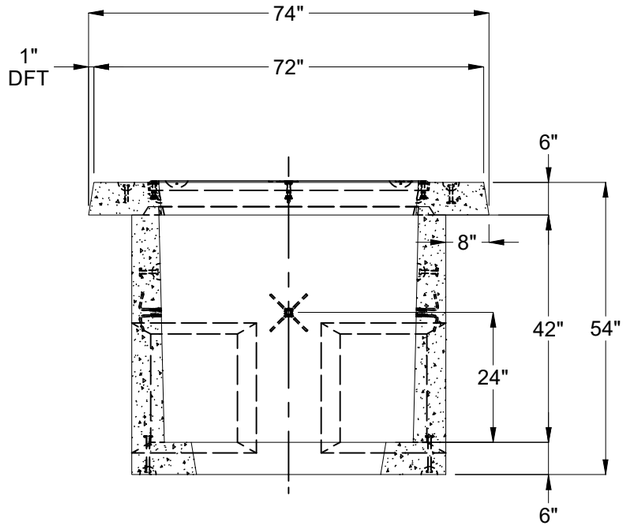

SECTION B-B

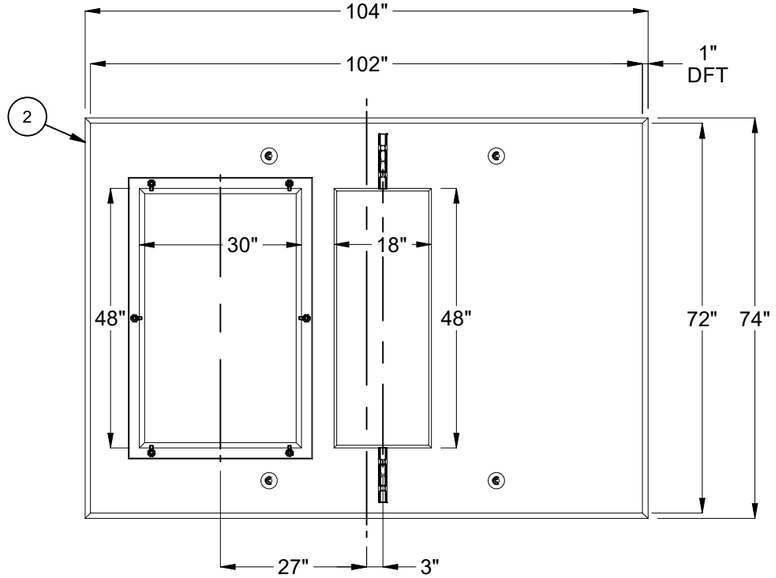

PLAN VIEW
(EQUIPMENT PAD)

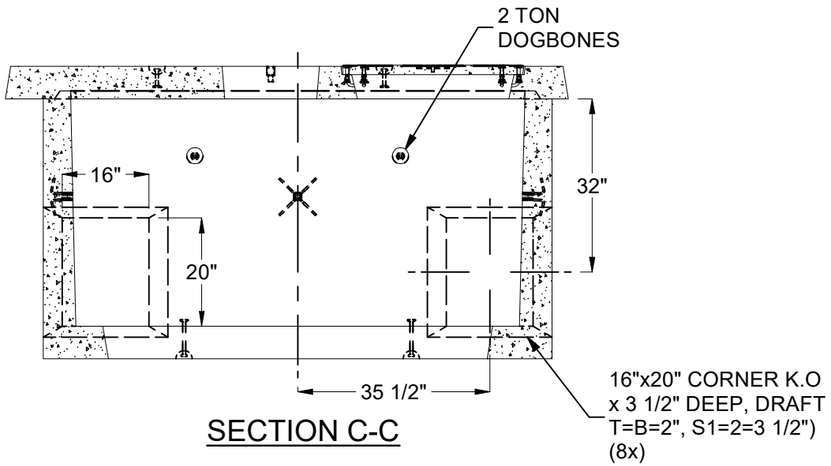

SECTION C-C

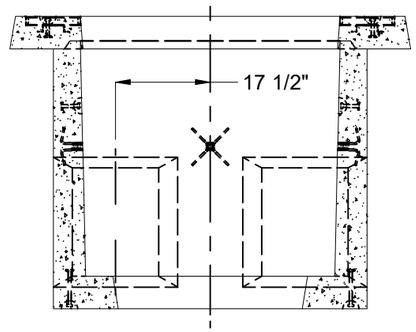

SECTION D-D

BURY DEPTH:	-0.3' - 0.3' to Top		
WATER LEVEL:	Below Structure	APPROX. WEIGHT:	9088.13 Lbs
DESIGN SPEC:	ACI 318,ASTM C857	LOADING SPEC:	A-03 (300 psf)
AGENCY:	Moreno Valley	AGENCY SPEC:	MVEU-714-0

Infrastructure
JENSEN
WWW.JENSENPRECAST.COM

©2025 Jensen Infrastructure - All rights reserved.
All materials appearing as Jensen Infrastructure documents and the like are proprietary work product and are protected under U.S. copyright and other laws.
Unless in conjunction with business conducted with Jensen Infrastructure any use of Jensen Infrastructure work product without express, written consent is prohibited, and recipient is prohibited from distributing any and all work product to non-approved third parties under penalty of civil action. This product shall only be produced in a Jensen Infrastructure facility.

DESCRIPTION:	Slab Box Layout 4884x42 Knockout 30"x48"E Moreno Valley MVEU-714-0 LAYOUT DRAWING		REV: A-1
PART NUMBER:	200070053	DRAWN BY:	J. Prado
CREATED:	11/8/2022	MODIFIED:	6/10/2025
			SHEET: 2 OF 2

200070053.idw