DESIGN NOTES:

- CONCRETE SHALL HAVE A 28 DAY MINIMUM COMPRESSIVE STRENGTH OF 4000 PSI
- D-LOAD TO PRODUCE A 0.01-IN CRACK: 2000lbs/ft/ft
- CIRCUMFERENTIAL REINFORCING SHALL HAVE 1.5 INCH OF CONCRETE COVER

PRODUCTION NOTES:

- THIS PRODUCT SHALL ONLY BE PRODUCED IN A JENSEN PRECAST FACILITY
- LIFTING INSERTS SHALL BE INSTALLED PER MANUFACTURER'S REQUIREMENTS

BILL OF MATERIALS

ITEM	QTY	PART NUMBER	DESCRIPTION
1	21.162 ft^3	100002728	CONCRETE MIX GENERIC 4000 PSI
2	1	200069394	RCP MBK CAGE P30B Class 4 Bell-Spigot 96L

ALTERNATE REINFORCING OPTION	
PART NUMBER	DESCRIPTION
200069393	RCP CAGE P30B Class 4 Bell - Spigot 96L

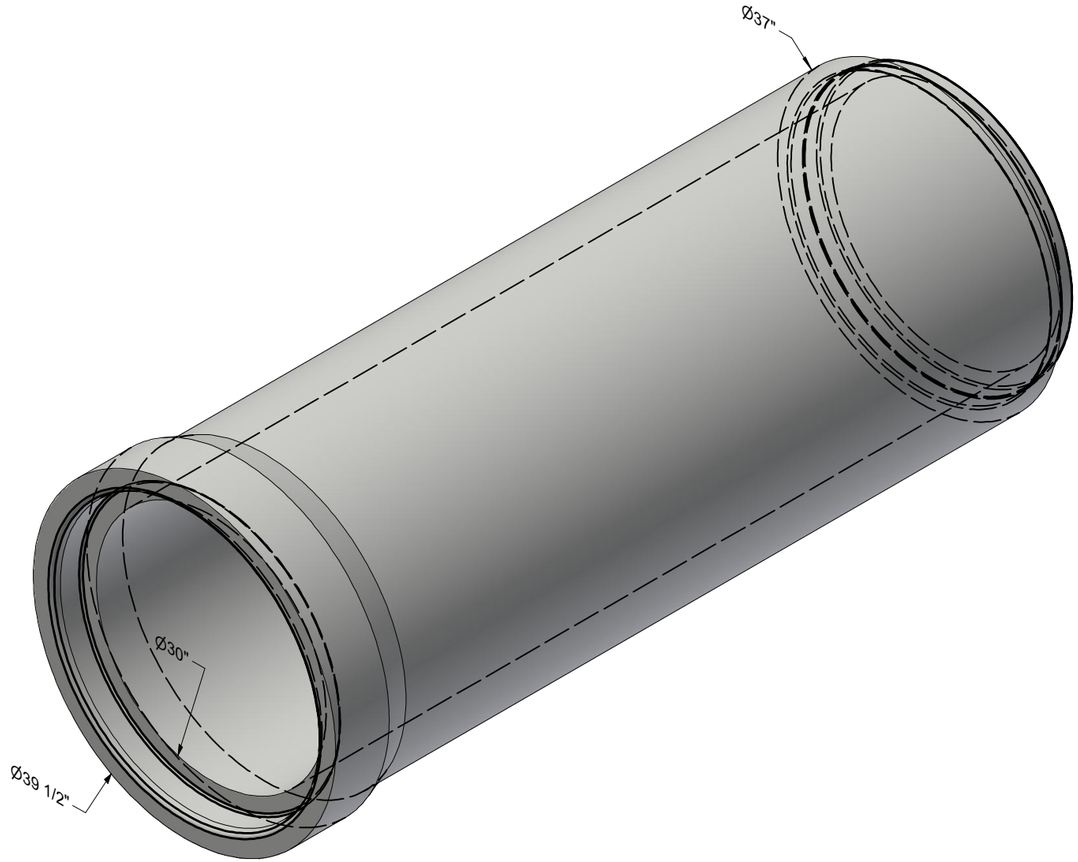

ISO REF

200069392.idw

CHANGE HISTORY

REV	DESCRIPTION	DATE	BY
1	2209-54352	9-28-22	DCH
2	MINOR REVISION - 1-1/2" INNER CLEARANCE	7-01-2024	EDC
3			

BURY DEPTH:	to		
WATER LEVEL:		APPROX. WEIGHT:	3180.34 Lbs
DESIGN SPEC:	ASTM C76/AASHTO M170	LOADING SPEC:	Class 4
REINFORCEMENT TYPE:	WWR Deformed	LIFTING TYPE:	None

JENSEN PRECAST EST. 1968

WWW.JENSENPRECAST.COM

©2024 Jensen Precast- All rights reserved.
All materials appearing as Jensen Precast documents and the like are proprietary work product and are protected under U.S. copyright and other laws.
Unless in conjunction with business conducted with Jensen Precast, any use of Jensen Precast work product without express, written consent is prohibited, and recipient is prohibited from distributing any and all work product to non-approved third parties under penalty of civil action.
This product shall only be produced in a Jensen Precast facility.

DESCRIPTION:	RCP P30B Class 4 Bell - Spigot 96L CASTING LAYOUT		REV: A-5-1
PART NUMBER:	200069392	DRAWN BY:	E CAMERON
CREATED:	10/14/2022	MODIFIED:	7/1/2024
			SHEET: 1 OF 2

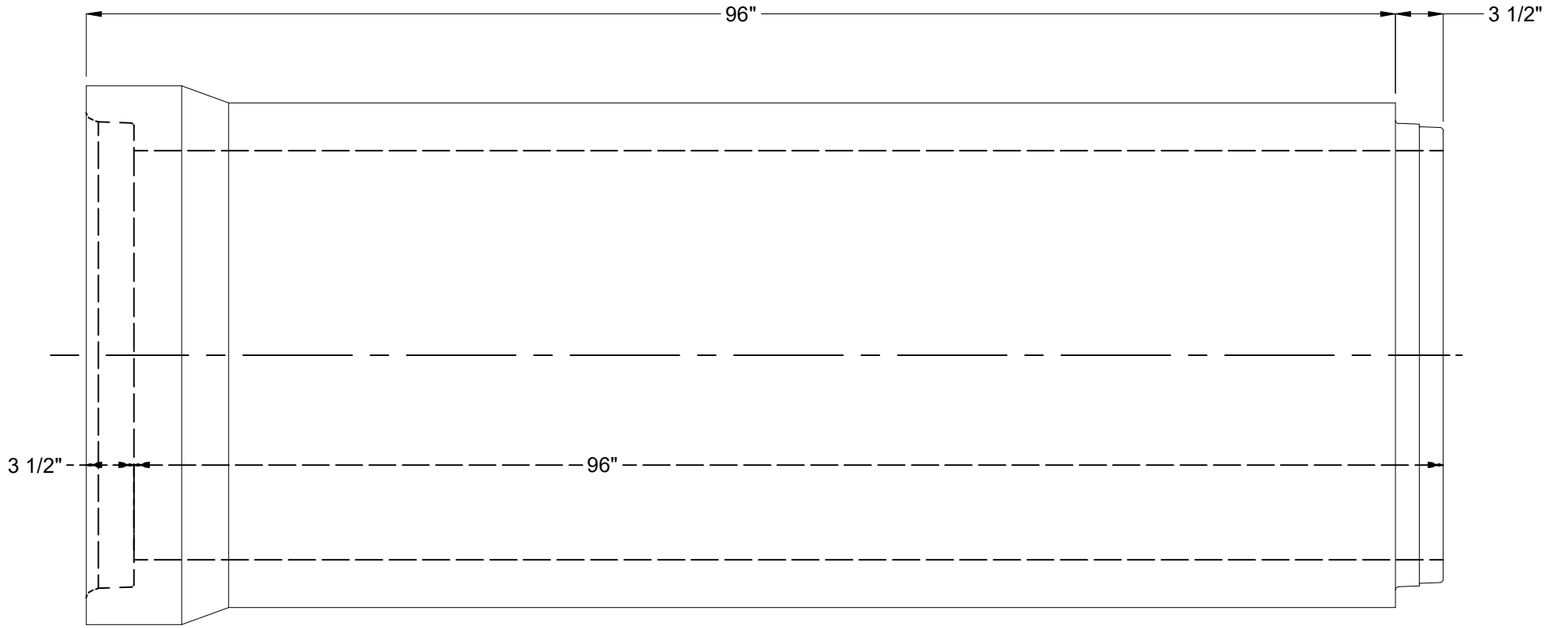

PLAN VIEW

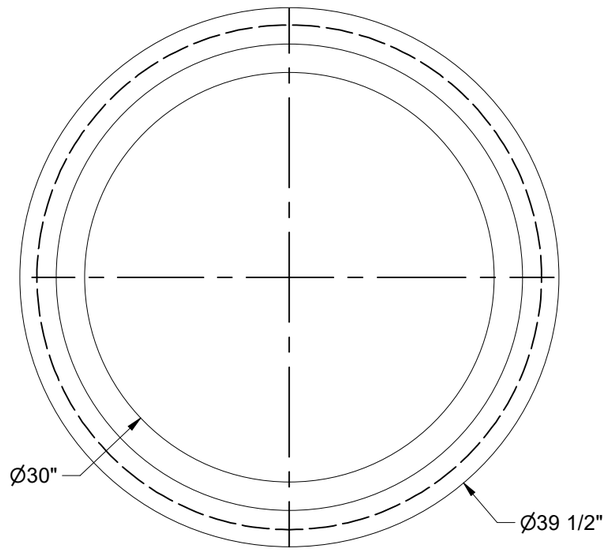

GROOVE END

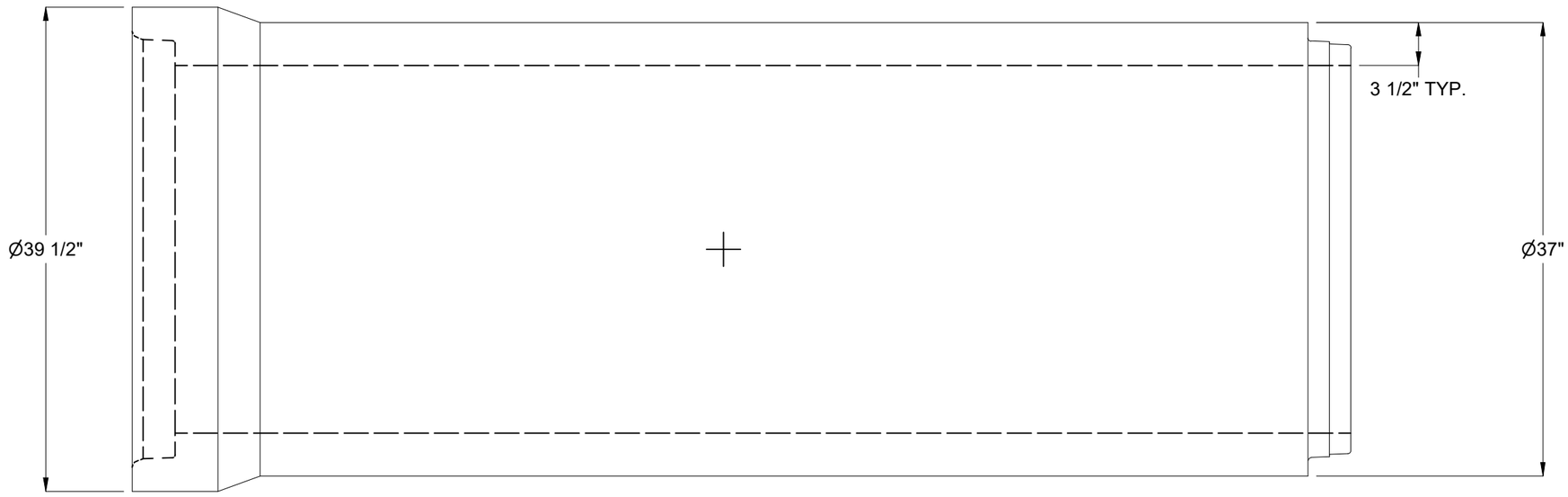

ELEVATION

BURY DEPTH:	to		
WATER LEVEL:		APPROX. WEIGHT:	3180.34 Lbs
DESIGN SPEC:	ASTM C76/AASHTO M170	LOADING SPEC:	Class 4
REINFORCEMENT TYPE:	WWR Deformed	LIFTING TYPE:	None

JENSEN PRECAST EST. 1968

WWW.JENSENPRECAST.COM

©2024 Jensen Precast- All rights reserved.
All materials appearing as Jensen Precast documents and the like are proprietary work product and are protected under U.S. copyright and other laws.
Unless in conjunction with business conducted with Jensen Precast, any use of Jensen Precast work product without express, written consent is prohibited, and recipient is prohibited from distributing any and all work product to non-approved third parties under penalty of civil action.
This product shall only be produced in a Jensen Precast facility.

DESCRIPTION:	RCP P30B Class 4 Bell - Spigot 96L CASTING DRAWING		REV: A-5-1
PART NUMBER:	200069392	DRAWN BY:	E CAMERON
CREATED:	10/14/2022	MODIFIED:	7/1/2024
			SHEET: 2 OF 2

200069392.idw