| NOTES |
|---|
| ■ FOR COMPLETE DESIGN AND PRODUCT INFORMATION CONTACT JENSEN PRECAST. |

## BILL OF MATERIALS

| ITEM | UNIT QTY | QTY | PART NUMBER | DESCRIPTION |
|---|---|---|---|---|
| 1 | 21.162 ft^3 | 21.162 ft^3 | 100002728 | CONCRETE MIX GENERIC 4000 PSI |
| 2 | 1 | 1 | 200068944 | WWR REINFORCING CAGE 200068944 |

| ALTERNATE REINFORCING OPTION | |
|---|---|
| PART NUMBER | DESCRIPTION |
| 200068946 | RCP CAGE P30B Class 3 Bell-Spigot 96L |

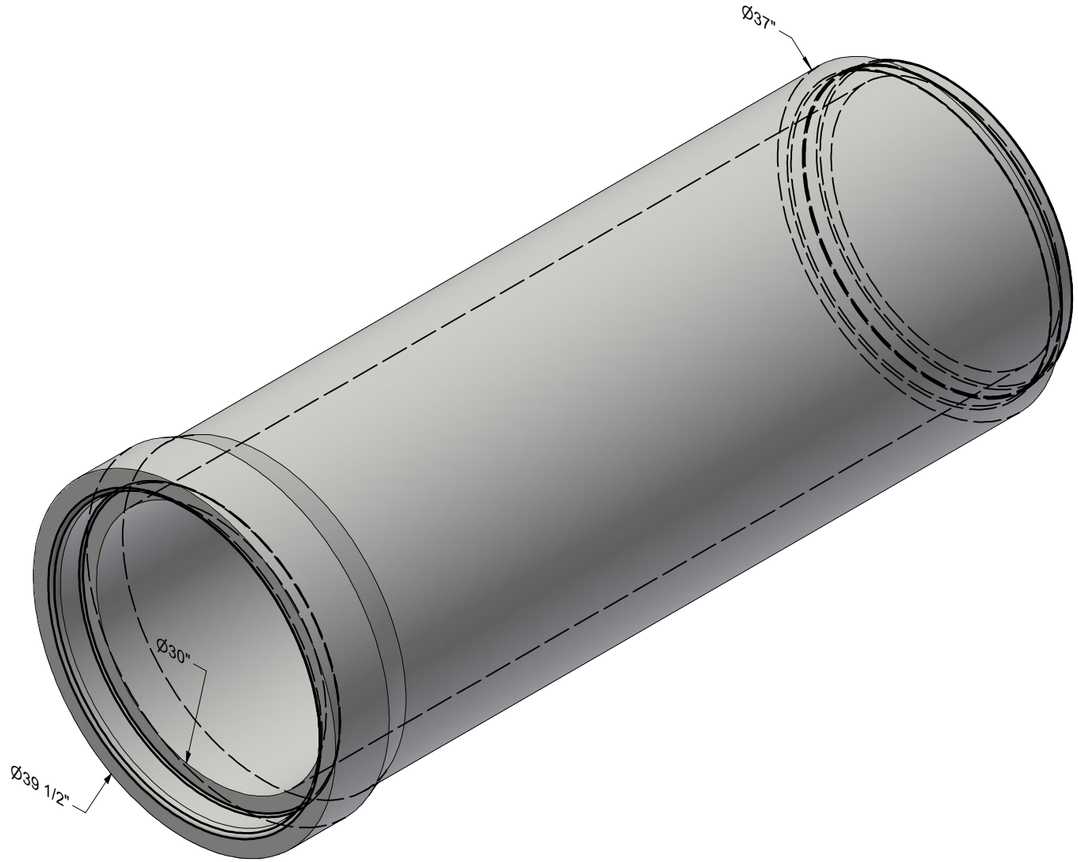


ISO REF

200068943.idw

| CHANGE HISTORY | | | |
|---|---|---|---|
| REV | DESCRIPTION | DATE | BY |
| 1 | 2209-54352 | 9-28-22 | DCH |
| 2 | REINFORCING UPDATES | 3-8-23 | JW |

| | | | |
|---|---|---|---|
| BURY DEPTH: | to | | |
| WATER LEVEL: | | WEIGHT: | 3180.33 Lbs |
| DESIGN SPEC: | ASTM C76/AASHTO M170 | LOADING SPEC: | Class 3 |
| REINFORCEMENT TYPE: | WWR Deformed | LIFTING TYPE: | None |

JENSEN PRECAST EST. 1968

WWW.JENSENPRECAST.COM

©2023 Jensen Precast- All rights reserved.
All materials appearing as Jensen Precast documents and the like are proprietary work product and are protected under U.S. copyright and other laws.
Unless in conjunction with business conducted with Jensen Precast, any use of Jensen Precast work product without express, written consent is prohibited, and recipient is prohibited from distributing any and all work product to non-approved third parties under penalty of civil action.

| | | | |
|---|---|---|---|
| DESCRIPTION: | RCP P30B Class 3 Bell - Spigot 96L<br>CASTING LAYOUT | | REV: B-1 |
| PART NUMBER: | 200068943 | DRAWN BY: | M. Montez |
| CREATED: | 2/12/2020 | MODIFIED: | 3/8/2023 |
| | | | SHEET: 1 OF 2 |

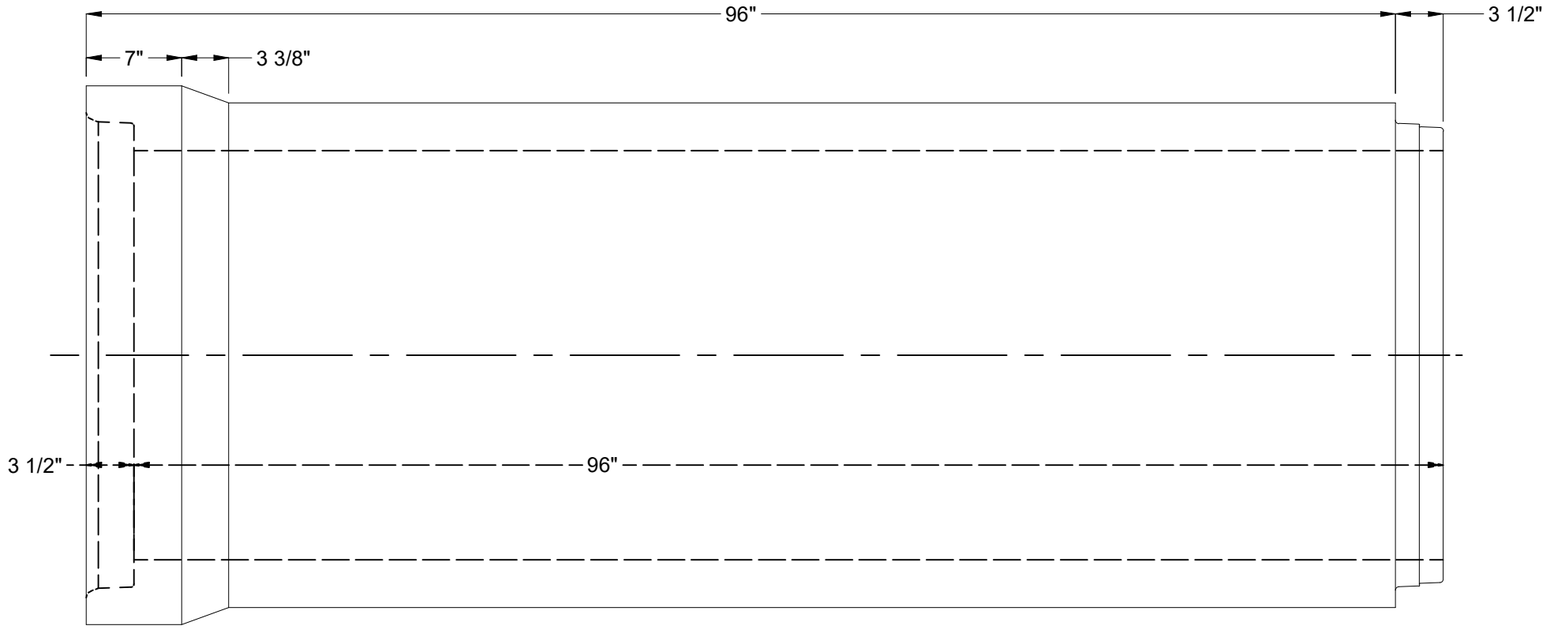


PLAN VIEW

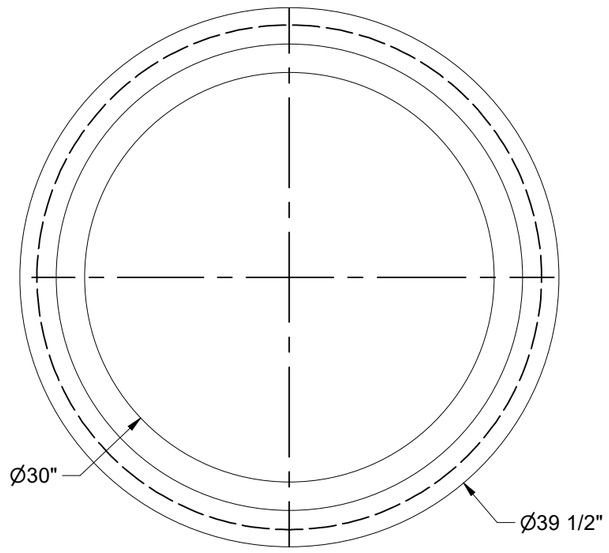


GROOVE END

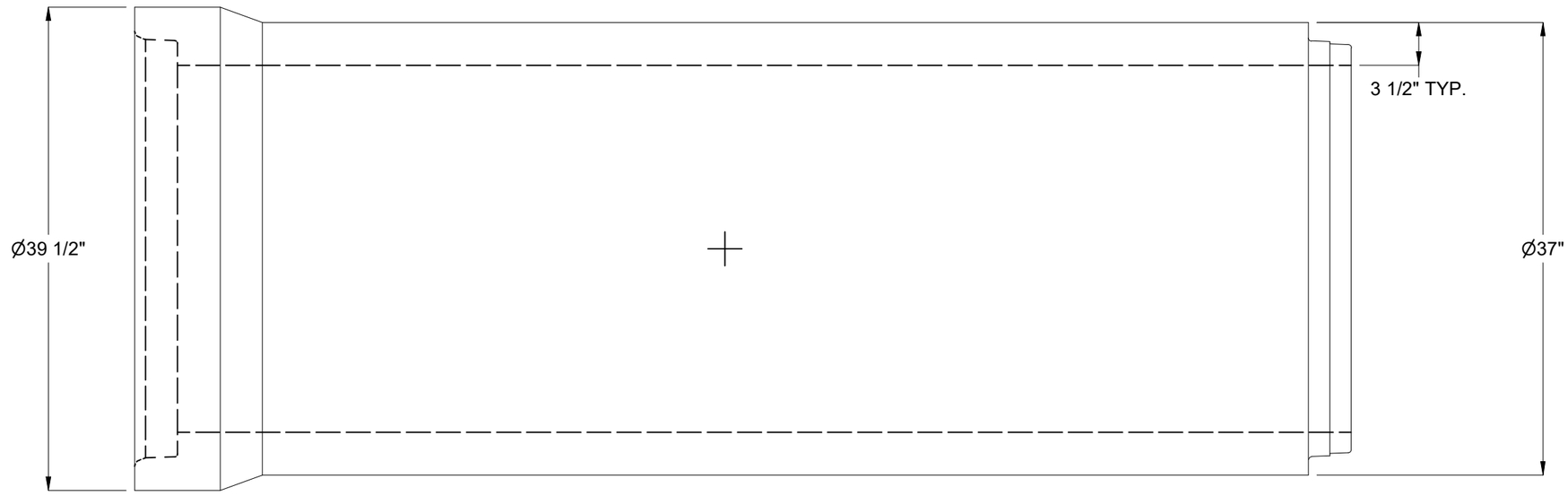


ELEVATION

| | | | |
|---|---|---|---|
| BURY DEPTH: | to | | |
| WATER LEVEL: | | WEIGHT: | 3180.33 Lbs |
| DESIGN SPEC: | ASTM C76/AASHTO M170 | LOADING SPEC: | Class 3 |
| REINFORCEMENT TYPE: | WWR Deformed | LIFTING TYPE: | None |

JENSEN PRECAST EST. 1968

WWW.JENSENPRECAST.COM

©2023 Jensen Precast- All rights reserved.
All materials appearing as Jensen Precast documents and the like are proprietary work product and are protected under U.S. copyright and other laws.
Unless in conjunction with business conducted with Jensen Precast, any use of Jensen Precast work product without express, written consent is prohibited, and recipient is prohibited from distributing any and all work product to non-approved third parties under penalty of civil action.

| | | | |
|---|---|---|---|
| DESCRIPTION: | RCP P30B Class 3 Bell - Spigot 96L<br>CASTING DRAWING | | REV: B-1 |
| PART NUMBER: | 200068943 | DRAWN BY: | M. Montez |
| CREATED: | 2/12/2020 | MODIFIED: | 3/8/2023 |
| | | | SHEET: 2 OF 2 |

200068943.idw