DESIGN NOTES
■ ALL PARTS TO BE STENCILED: MFG DATE / JOB NUMBER / PRODUCT ID / WEIGHT.

BILL OF MATERIALS

ITEM	UNIT QTY	QTY	PART NUMBER	DESCRIPTION
1	1	1	100012881	Riser 4878x12 Pasadena V-208
2	1	1	100012882	Plug Cover 4878x8 Slab Top 30"C Pasadena V-208 R-1581
5	1	1	100006917	CI COVER 30DIA NF R-1581 HI VOLT POWER
6	1	4	100022412	PENTA BOLT 5/8-11 UNC 1-5/8 HD 304SS
4	1	4	100008123	PLUG VN CONCRETE SLAB PLASTIC
3	1	1	100008122	PLUG PICKHOLE NEOPRENE RUBBER CI COVER ED/LA

200068733.idw

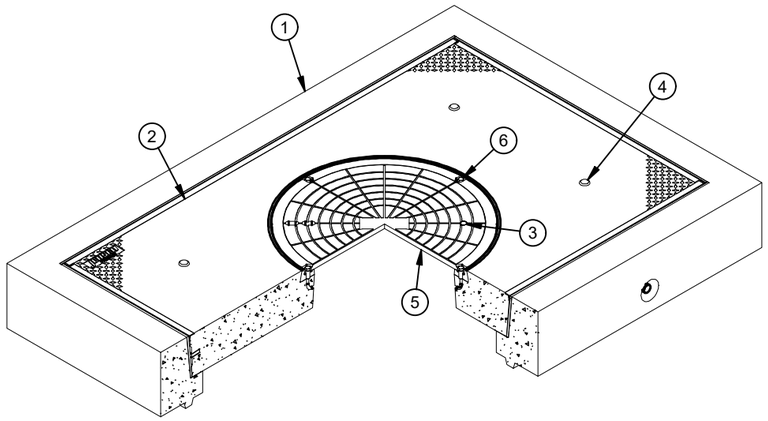

ISO VIEW

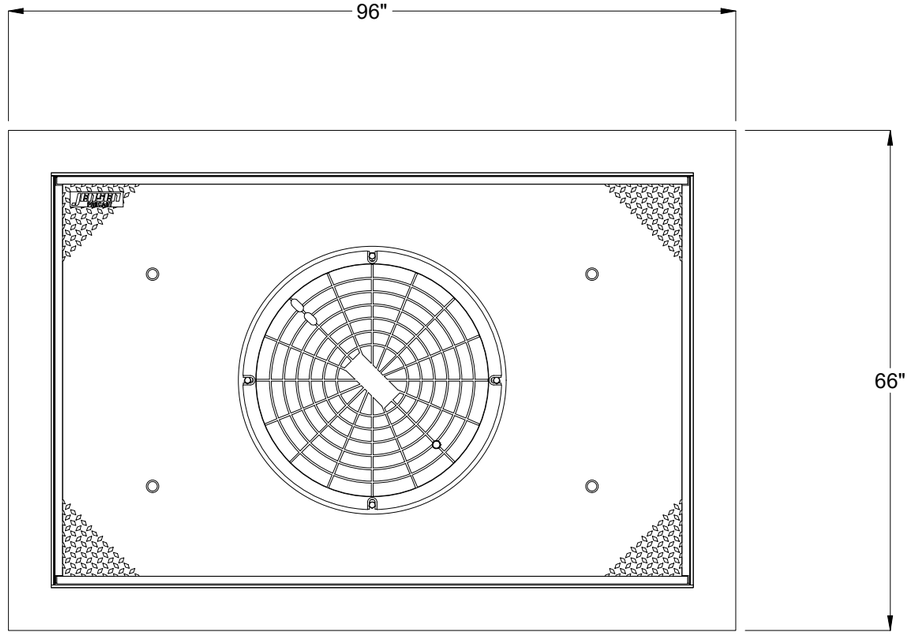

PLAN VIEW

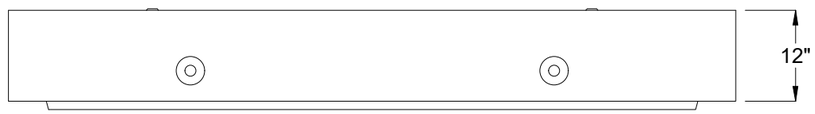

SIDE VIEW

LIFTING NOTES
■ FIELD INSTALLATION: PLANT DEMOLDING: MINIMUM HANDLING CONCRETE STRENGTH F'c = 5500 PSI RIGGING EQUALIZER REQUIRED TO EQUALIZE LOAD TO 4 LIFTING POINTS WITH A SLING ANGLE BETWEEN 60° AND 90°

REVISION HISTORY			
REV	DESCRIPTION	DATE	APPROVED
A-2	INITIAL RELEASE	6/20/2023	

BURY DEPTH:	0.0' - 0.0' to Top		
WATER LEVEL:	3.0'	APPROX. WEIGHT:	5098.02 Lbs
DESIGN SPEC:	ACI 318,ASTM C857	LOADING SPEC:	A-16 (AASHTO HS20-44)
AGENCY:	Pasadena	AGENCY SPEC:	V-208 R-1581

JENSEN PRECAST EST. 1968

WWW.JENSENPRECAST.COM

©2023 Jensen Precast- All rights reserved.
All materials appearing as Jensen Precast documents and the like are proprietary work product and are protected under U.S. copyright and other laws.
Unless in conjunction with business conducted with Jensen Precast, any use of Jensen Precast work product without express, written consent is prohibited, and recipient is prohibited from distributing any and all work product to non-approved third parties under penalty of civil action.

DESCRIPTION:	Vault Neck and Plug Cover Assembly 4878x12 30"C Pasadena V-208 R-1581 LAYOUT REVIEW		REV: A-2
PART NUMBER:	200068733	DRAWN BY:	J. Prado
CREATED:	9/22/2022	MODIFIED:	6/20/2023
			SHEET: 1 OF 1