DESIGN NOTES
■ FOR COMPLETE DESIGN AND PRODUCT INFORMATION CONTACT JENSEN PRECAST.

BILL OF MATERIALS

ITEM	UNIT QTY	QTY	PART NUMBER	DESCRIPTION
1	92.609 ft^3	92.609 ft^3	100011429	CONCRETE MIX GENERIC 7000 PSI
2	1	1	300151082	REINFORCING MAT 300151082
3	1	8	100004880	ANCHOR UTILITY .671DIA 5.625-SLAB GALV P75 6UA671
4	1	4	100031324	ANCHOR RAPIDLIFT ERECTION 4T MB RL-7 W/ SHEAR PLATE A-2073

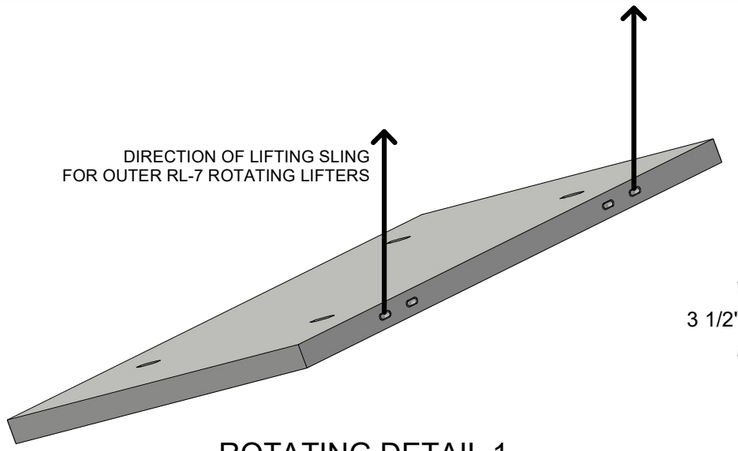

ROTATING DETAIL 1

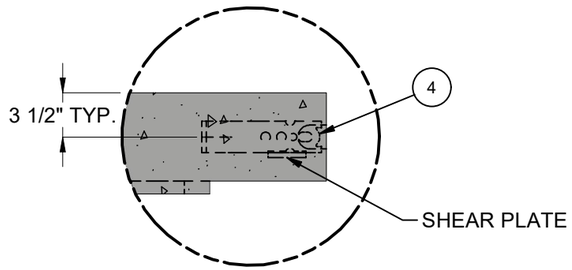

OUTER RL-7 DETAIL

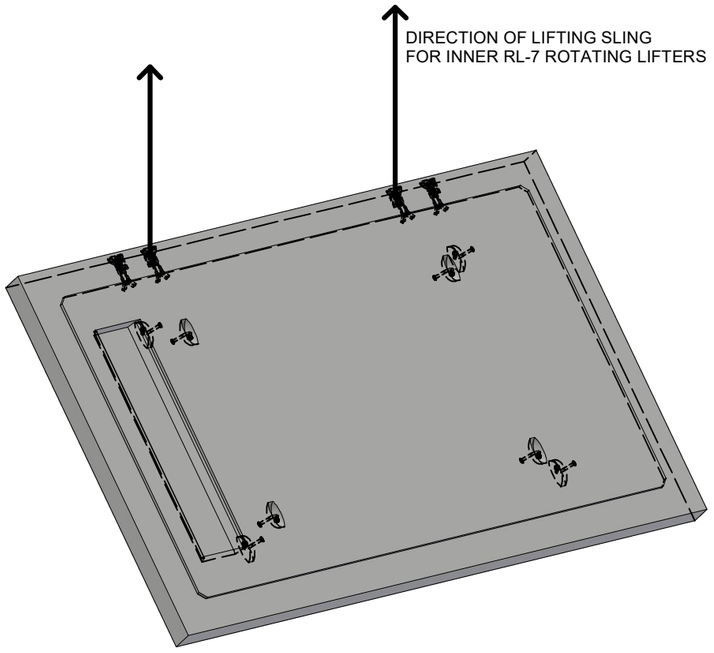

ROTATING DETAIL 2

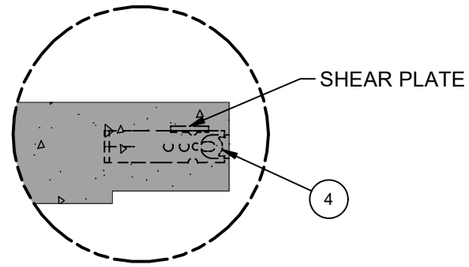

INNER RL-7 DETAIL

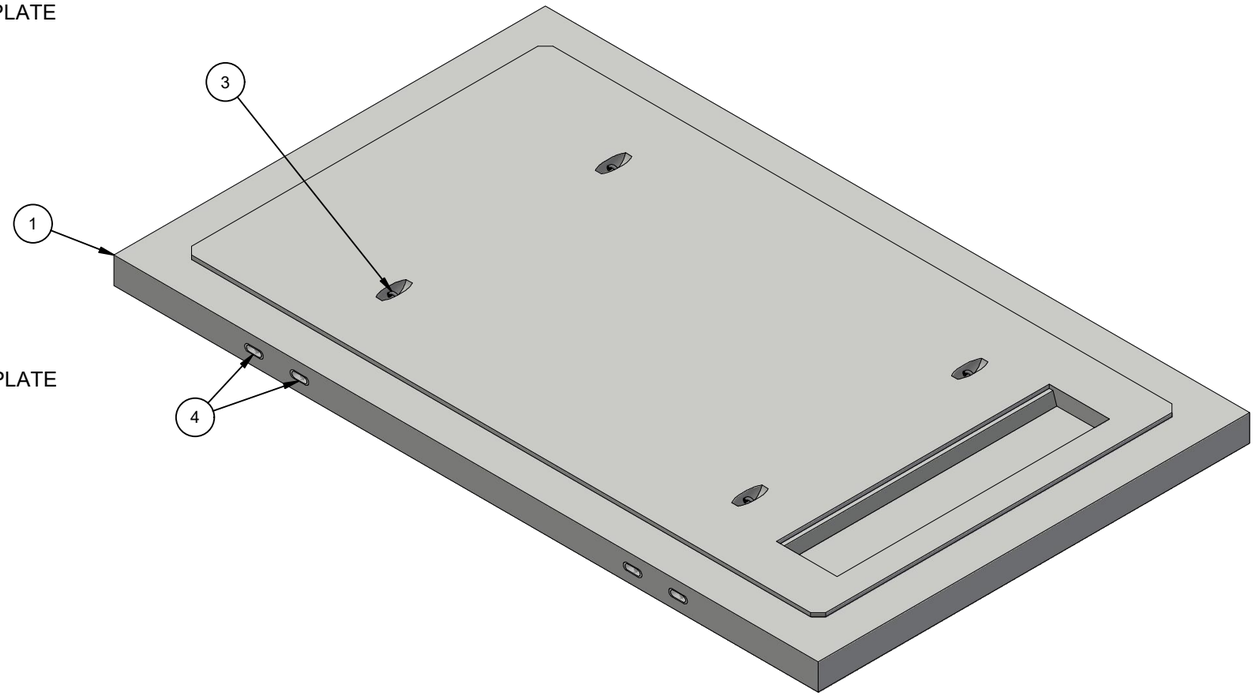

ISO LAYOUT

LIFTING NOTES
■ PLANT DEMOLDING AND FIELD INSTALLATION: MINIMUM HANDLING CONCRETE STRENGTH F'c = 2500 PSI RIGGING EQUALIZER REQUIRED TO EQUALIZE LOAD TO 4 LIFTING POINTS WITH A SLING ANGLE BETWEEN 60° AND 90°
■ ROTATING: MINIMUM HANDLING CONCRETE STRENGTH F'c = 2500 PSI RIGGING EQUALIZER REQUIRED TO EQUALIZE LOAD TO 2 LIFTING POINTS

CHANGE HISTORY			
NO.	DESCRIPTION	DATE	BY
1	2206-52893	11/2/2022	JW

BURY DEPTH:	9.3' - 11.3' to Top		
WATER LEVEL:	1.0'	APPROX. WEIGHT:	13961.16 Lbs
DESIGN SPEC:	ASTM C857,ACI 318	LOADING SPEC:	A-16 (AASHTO HS20-44)
REINFORCEMENT TYPE:	Rebar	LIFTING TYPE:	Dogbone

JENSEN PRECAST EST. 1968

WWW.JENSENPRECAST.COM

©2022 Jensen Precast- All rights reserved.
All materials appearing as Jensen Precast documents and the like are proprietary work product and are protected under U.S. copyright and other laws.
Unless in conjunction with business conducted with Jensen Precast, any use of Jensen Precast work product without express, written consent is prohibited, and recipient is prohibited from distributing any and all work product to non-approved third parties under penalty of civil action.

DESCRIPTION:	Vault 96168x8 Slab Bottom Sump CASTING LAYOUT	REV:	A-2
PART NUMBER:	200068710	DRAWN BY:	J. Warren
CREATED:	7/6/2022	MODIFIED:	11/2/2022
		SHEET:	1 OF 2

200068710.idw

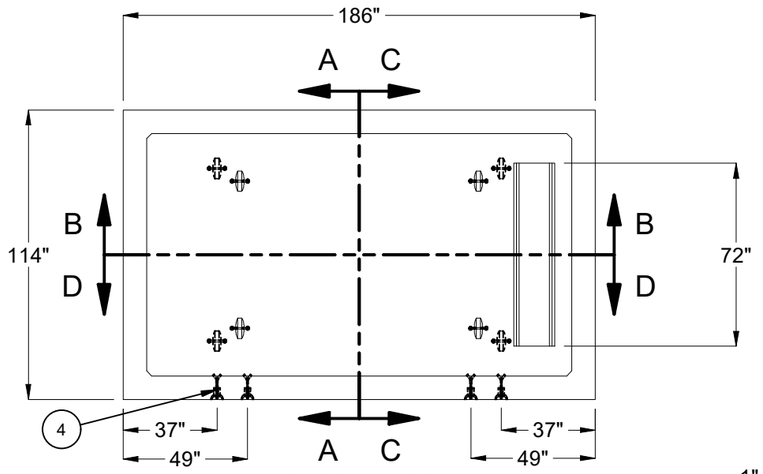

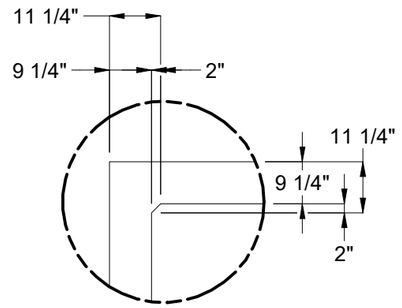

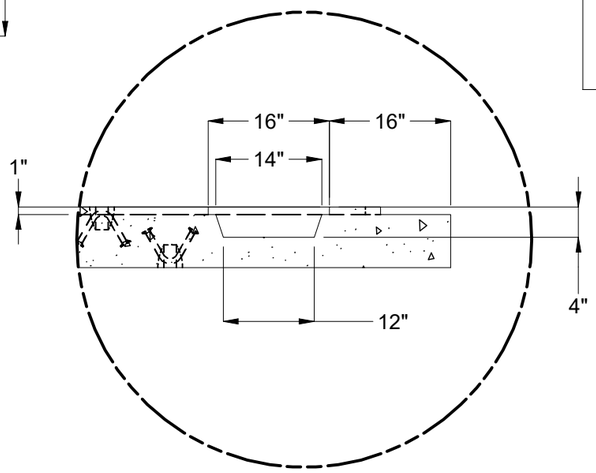

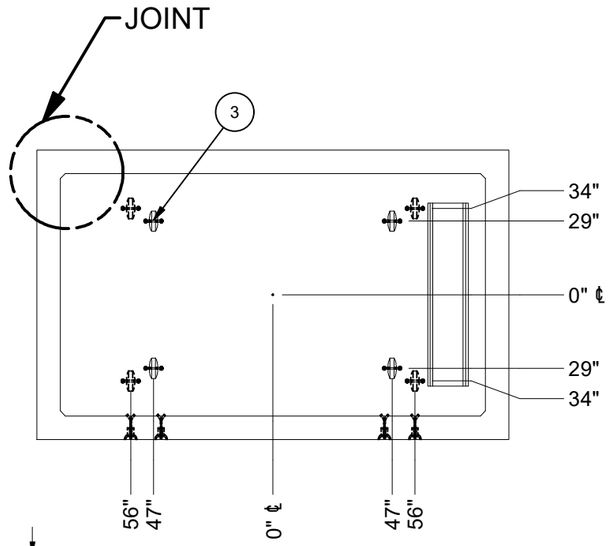

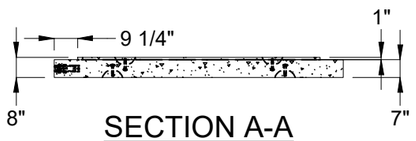

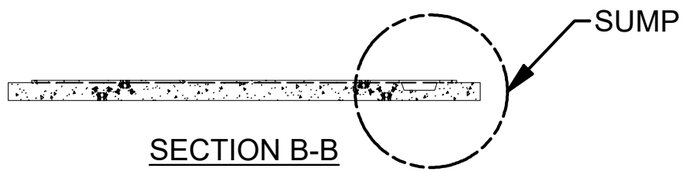

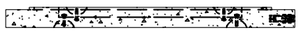

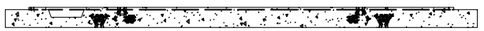

BURY DEPTH:	9.3' - 11.3' to Top		
WATER LEVEL:	1.0'	APPROX. WEIGHT:	13961.16 Lbs
DESIGN SPEC:	ASTM C857,ACI 318	LOADING SPEC:	A-16 (AASHTO HS20-44)
REINFORCEMENT TYPE:	Rebar	LIFTING TYPE:	Dogbone

JENSEN PRECAST EST. 1968

WWW.JENSENPRECAST.COM

©2022 Jensen Precast- All rights reserved.
All materials appearing as Jensen Precast documents and the like are proprietary work product and are protected under U.S. copyright and other laws.
Unless in conjunction with business conducted with Jensen Precast, any use of Jensen Precast work product without express, written consent is prohibited, and recipient is prohibited from distributing any and all work product to non-approved third parties under penalty of civil action.

DESCRIPTION:	Vault 96168x8 Slab Bottom Sump CASTING DRAWING		REV: A-2
PART NUMBER:	200068710	DRAWN BY:	J. Warren
CREATED:	7/6/2022	MODIFIED:	11/2/2022
			SHEET: 2 OF 2

200068710.idw