DESIGN NOTES

- DESIGNED IN ACCORDANCE WITH ASTM C478
- FOR COMPLETE DESIGN AND PRODUCT INFORMATION CONTACT JENSEN PRECAST.

BILL OF MATERIALS

ITEM	UNIT QTY	QTY	PART NUMBER	DESCRIPTION
1	5.143 ft^3	5.143 ft^3	100011428	CONCRETE MIX GENERIC 6500 PSI
2	1	4	100002766	INSERT FERRULE LOOP 5/8 X 3-1/2 PLATED FX-5
3	1	1	200068652	REINF 100015040 WWR MH 3X8 W3.75xW2 96IN ASTM A-1024

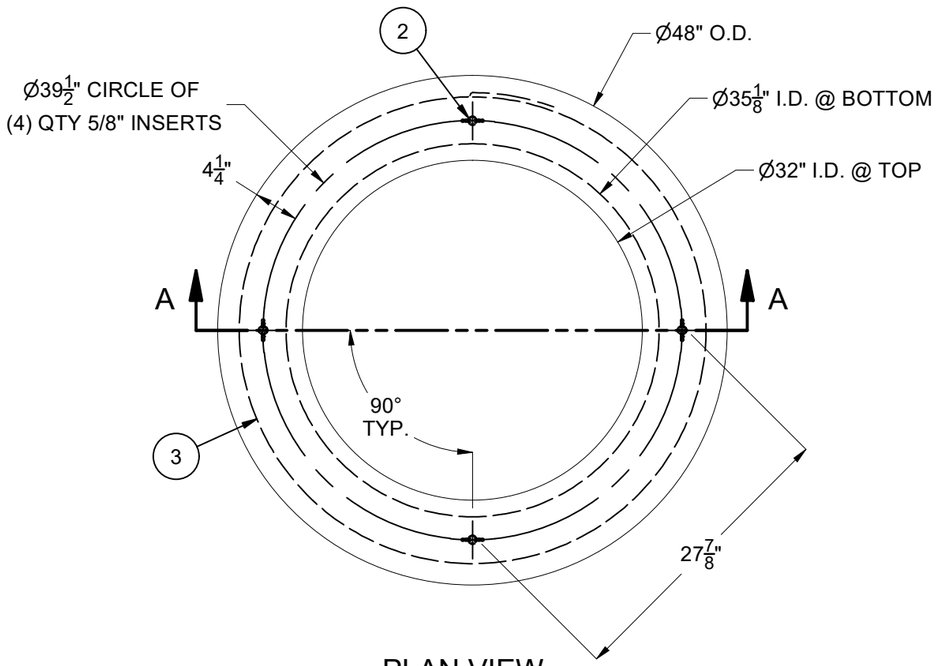

PLAN VIEW
(JOINT HIDDEN FOR CLARITY)

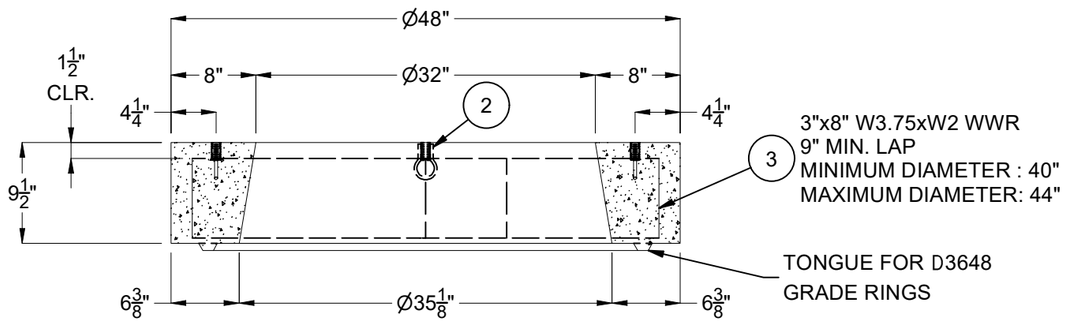

SECTION A-A

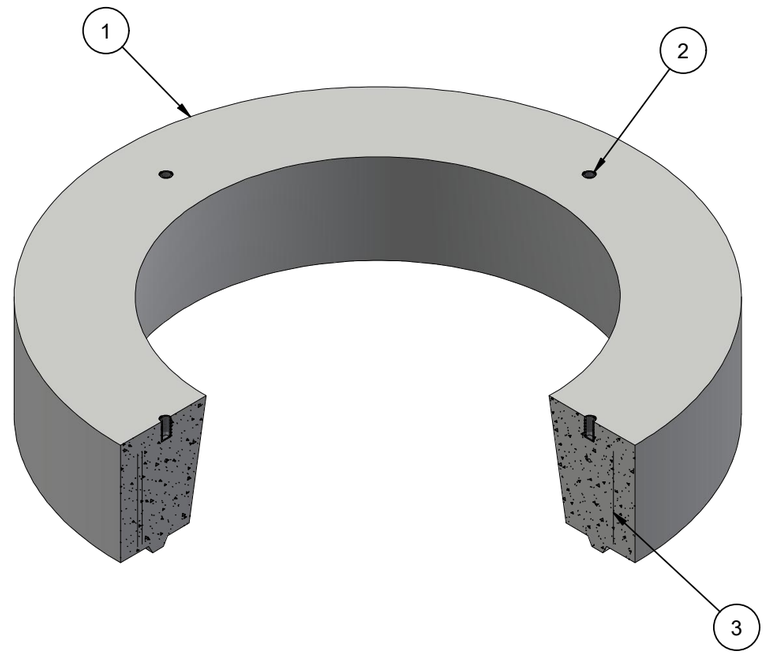

ISO SECTION VIEW

LIFTING NOTES

- THIS CONCRETE PRODUCT IS DESIGNED TO BE LIFTED AT 3000 PSI WITH 2 LIFT CONNECTIONS EQUALLY LOADED TO 2 LIFTING POINTS AT A MINIMUM 60° SLING ANGLE, MEASURED FROM HORIZONTAL.

BURY DEPTH:	0.3' - 30.0' to Top		
WATER LEVEL:	0.0'	WEIGHT:	773.91 Lbs
DESIGN SPEC:	ASTM C478	LOADING SPEC:	N/A
AGENCY:	HECO	AGENCY SPEC:	CS9401-5

JENSEN PRECAST EST. 1968

WWW.JENSENPRECAST.COM

©2018 Jensen Precast- All rights reserved.
All materials appearing as Jensen Precast documents and the like are proprietary work product and are protected under U.S. copyright and other laws.
Unless in conjunction with business conducted with Jensen Precast, any use of Jensen Precast work product without express, written consent is prohibited, and recipient is prohibited from distributing any and all work product to non-approved third parties under penalty of civil action.

CHANGE HISTORY

NO.	DESCRIPTION	DATE	BY
1	INITIAL RELEASE	9/21/2022	BCM

DESCRIPTION: Grade Ring Reducer Cone Concentric D3648 to D32x9.5IN Flat HECO CS9401-5
LAYOUT REVIEW

REV: A-1

PART NUMBER:	200068651	DRAWN BY:	B. McConnell
CREATED:	10/2/2018	MODIFIED:	9/21/2022

SHEET: 1 OF 1

200068651.idw