NOTES
■ FOR COMPLETE DESIGN AND PRODUCT INFORMATION CONTACT JENSEN PRECAST.

BILL OF MATERIALS

ITEM	QTY	PART NUMBER	DESCRIPTION	MASS
1	1	100001080	Drainage 2436x36 Rect. Bottom Section Knockout	2673.992 lbmass
2	1	100005921	CI FRAME 18X36 NC-3541 ASTM A-48 CL35B TYPE 1A	41.532 lbmass
3	1	100005919	CI CURB GRATE 18 X 36 FA-8543-02 ASTM A-48 CL35B TYPE 1A	99.669 lbmass
4	1	100005920	CI HOOD NC-3541 ASTM A-48 CL35B TYPE 1A	92.788 lbmass

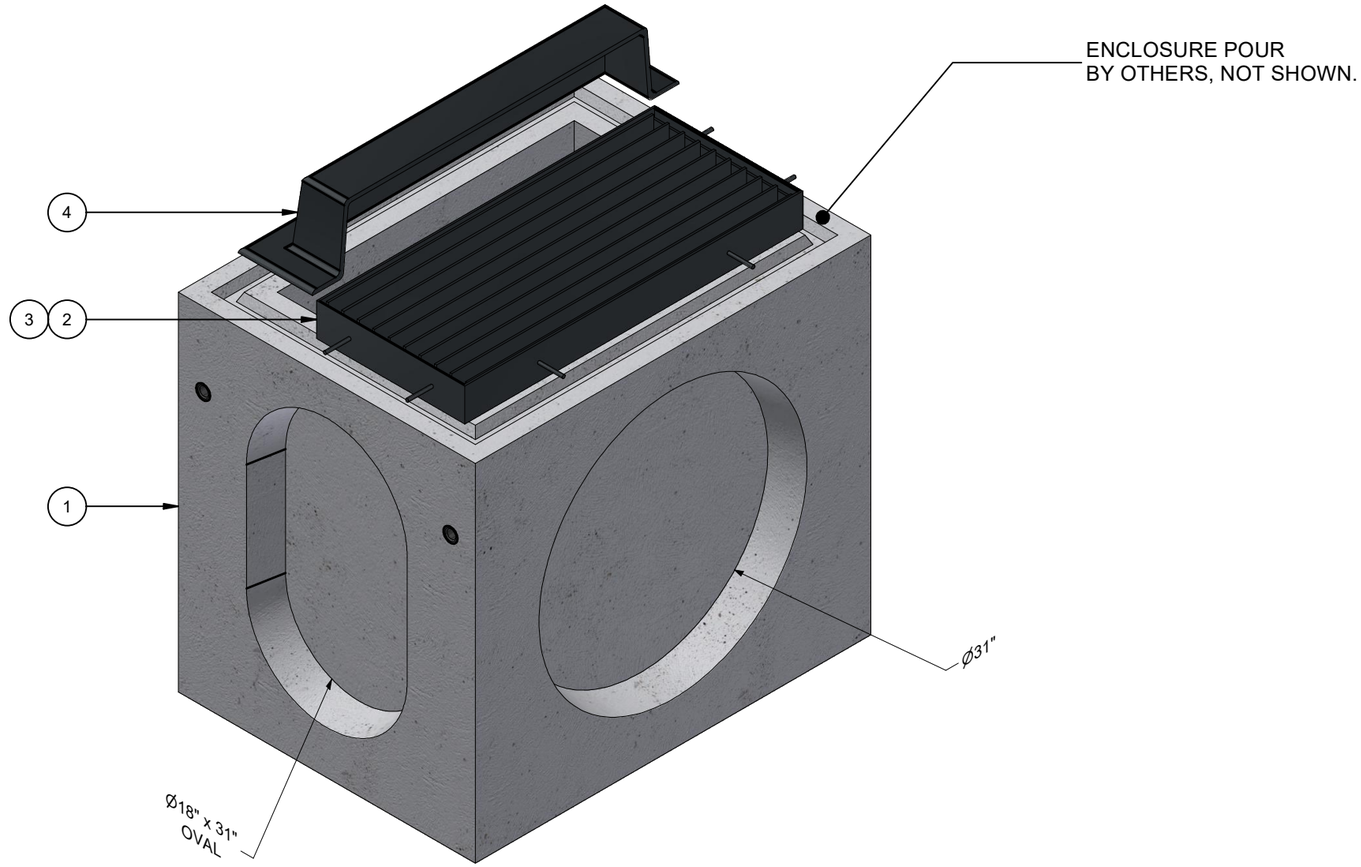

ISO VIEW

200068236.idw

LIFTING NOTES
■ PLANT DEMOLDING & FIELD INSTALLATION: MINIMUM HANDLING CONCRETE STRENGTH F'c = 3000 PSI RIGGING EQUALIZER REQUIRED TO EQUALIZE LOAD TO 2 LIFTING POINTS WITH A 60 DEGREE SLING ANGLE

BURY DEPTH:	0.0' - 4.8' to Top		
WATER LEVEL:	5.0'	APPROX. WEIGHT:	2907.98 Lbs
DESIGN SPEC:	ASTM C890,ACI 318	LOADING SPEC:	A-16 (AASHTO HS20-44)
REINFORCEMENT TYPE:		LIFTING TYPE:	

JENSEN PRECAST EST. 1968

WWW.JENSENPRECAST.COM

©2022 Jensen Precast- All rights reserved.
All materials appearing as Jensen Precast documents and the like are proprietary work product and are protected under U.S. copyright and other laws.
Unless in conjunction with business conducted with Jensen Precast, any use of Jensen Precast work product without express, written consent is prohibited, and recipient is prohibited from distributing any and all work product to non-approved third parties under penalty of civil action.

CHANGE HISTORY			
NO.	DESCRIPTION	DATE	BY
1	INITIAL RELEASE	8/15/2022	EDC
2			
3			

DESCRIPTION:	Drainage 2436 Layout Assembly CASTING LAYOUT		REV: A-1
PART NUMBER:	200068236	DRAWN BY:	E CAMERON
CREATED:	8/11/2022	MODIFIED:	9/7/2022
			SHEET: 1 OF 2

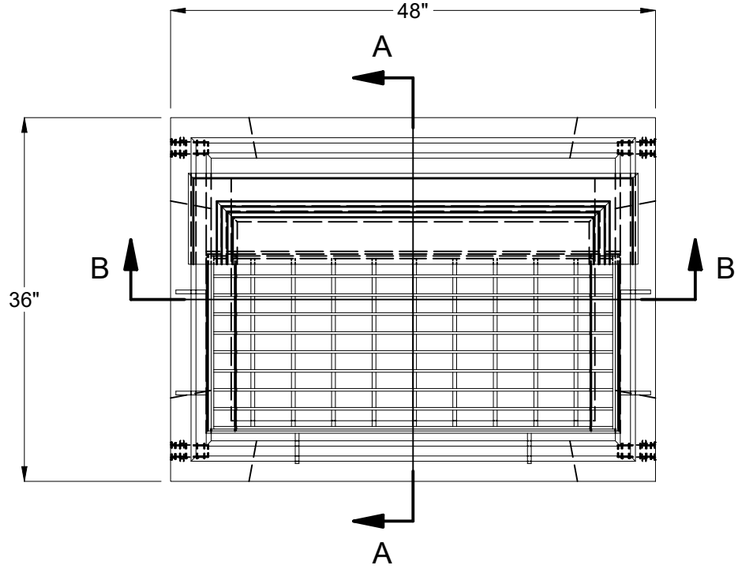

PLAN VIEW

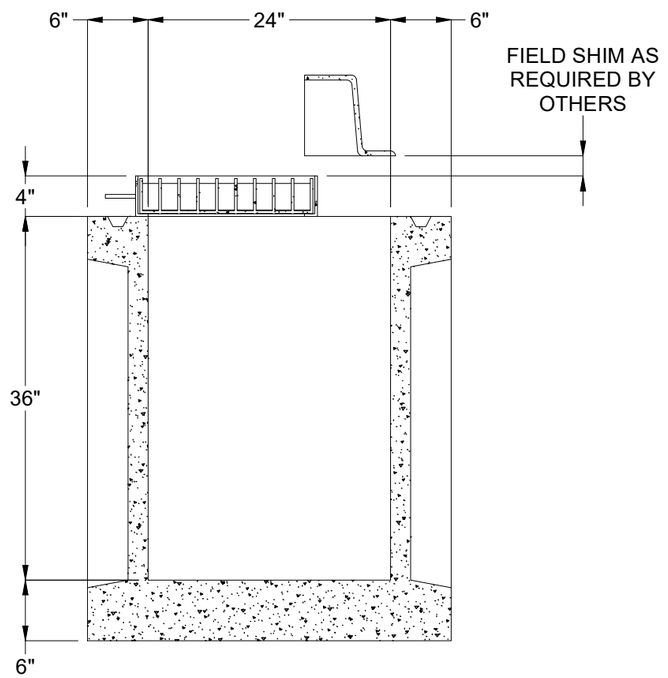

SECTION A-A

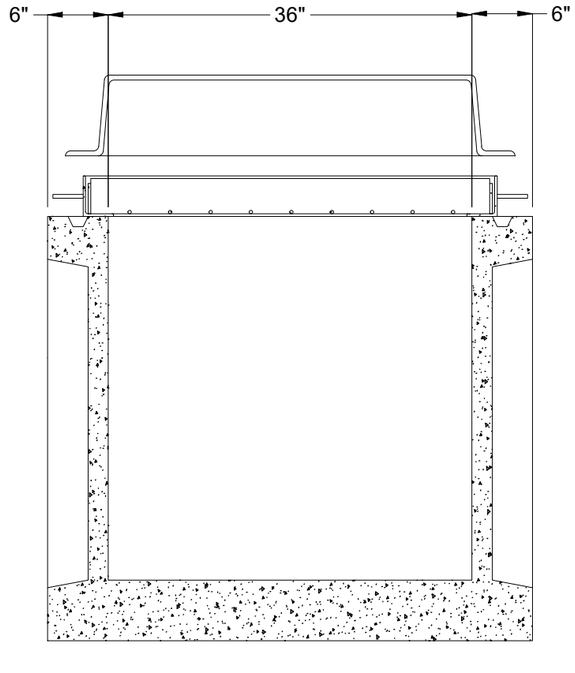

SECTION B-B

BURY DEPTH:	0.0' - 4.8' to Top		
WATER LEVEL:	5.0'	APPROX. WEIGHT:	2907.98 Lbs
DESIGN SPEC:	ASTM C890,ACI 318	LOADING SPEC:	A-16 (AASHTO HS20-44)
REINFORCEMENT TYPE:		LIFTING TYPE:	

JENSEN PRECAST EST. 1968

WWW.JENSENPRECAST.COM

©2022 Jensen Precast- All rights reserved.
All materials appearing as Jensen Precast documents and the like are proprietary work product and are protected under U.S. copyright and other laws.
Unless in conjunction with business conducted with Jensen Precast, any use of Jensen Precast work product without express, written consent is prohibited, and recipient is prohibited from distributing any and all work product to non-approved third parties under penalty of civil action.

DESCRIPTION:	Drainage 2436 Layout Assembly CASTING DRAWING		REV: A-1
PART NUMBER:	200068236	DRAWN BY:	E CAMERON
CREATED:	8/11/2022	MODIFIED:	9/7/2022
			SHEET: 2 OF 2

200068236.idw