NOTES
■ CONFORMS TO PGE SPECIFICATION L26100 DATED 12-11-2018
■ FOR COMPLETE DESIGN AND PRODUCT INFORMATION CONTACT JENSEN PRECAST.

BILL OF MATERIALS

ITEM	UNIT QTY	QTY	PART NUMBER	DESCRIPTION
1	21.867 ft^3	21.867 ft^3	100011425	CONCRETE MIX GENERIC 5000 PSI
2	1	1	200063368	CAS2-3366-CH4-DP-G-BD-SL-GR-PNW-OH07
3	1	1	100031278	PLATE 2x3 BRASS
4	1	4	100040446	ANCHOR RAPID LIFT TECH 5T CLUTCH 3.4375IN LONG MB RL-25
5	1	1	300151246	REINFORCING MAT 300151246
6	1	1	300151244	REINFORCING MAT 300151244

200068084.idw

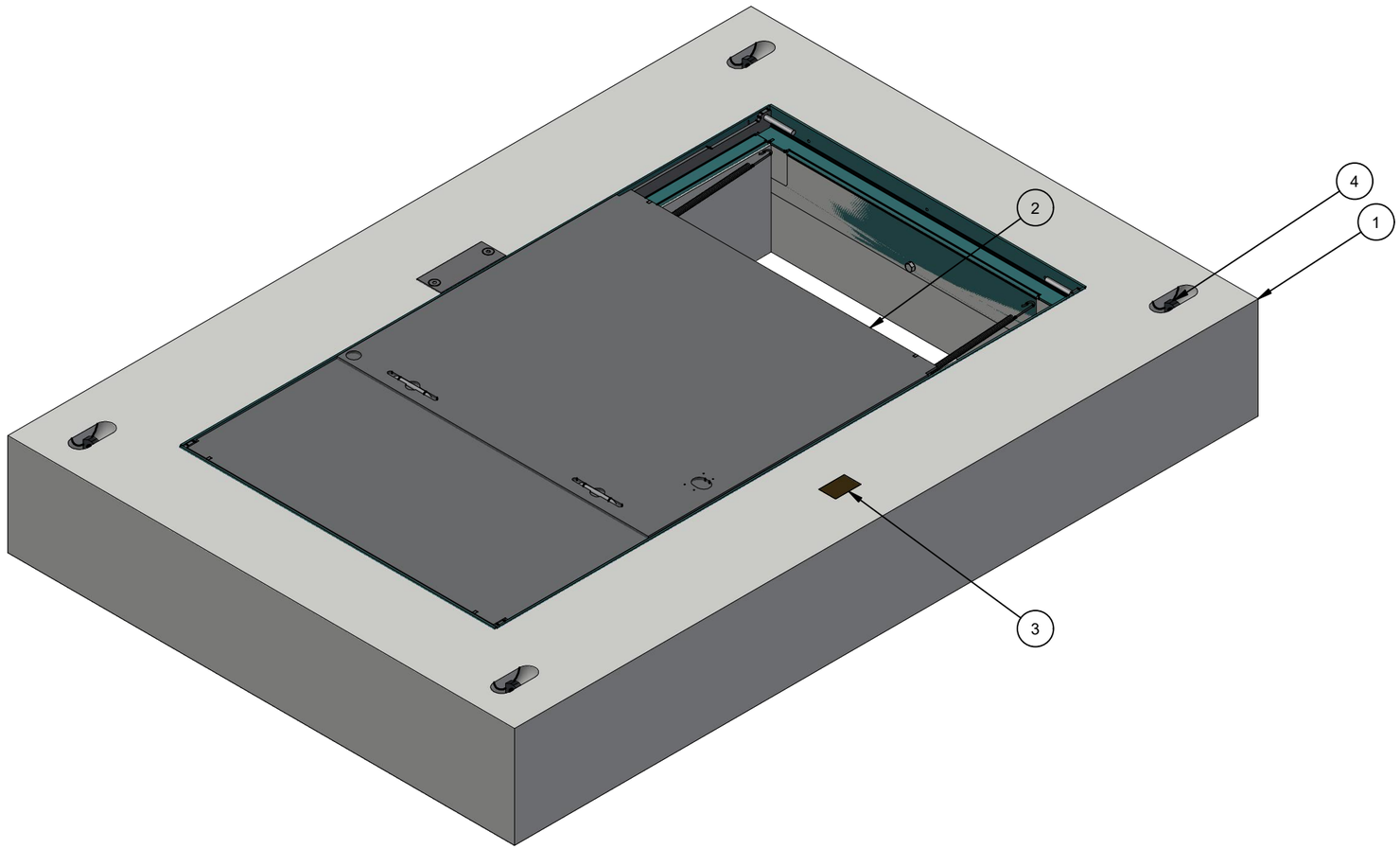

ISO LAYOUT

LIFTING NOTES
■ THIS CONCRETE PRODUCT IS DESIGNED TO BE LIFTED AT 3500 PSI WITH 4 LIFT CONNECTIONS EQUALLY LOADED TO 2 LIFTING POINTS AT A MINIMUM 65° SLING ANGLE, MEASURED FROM HORIZONTAL.

BURY DEPTH:	0.0' - 0.0' to Top		
WATER LEVEL:	5.0'	APPROX. WEIGHT:	3710.85 Lbs
DESIGN SPEC:	ASTM C857,ACI 318	LOADING SPEC:	A-16 (AASHTO HS20-44)
REINFORCEMENT TYPE:	Rebar	LIFTING TYPE:	Tech Erection Anchor

JENSEN PRECAST EST. 1968

WWW.JENSENPRECAST.COM

©2022 Jensen Precast- All rights reserved.
All materials appearing as Jensen Precast documents and the like are proprietary work product and are protected under U.S. copyright and other laws.
Unless in conjunction with business conducted with Jensen Precast, any use of Jensen Precast work product without express, written consent is prohibited, and recipient is prohibited from distributing any and all work product to non-approved third parties under penalty of civil action.

CHANGE HISTORY			
NO.	DESCRIPTION	DATE	BY
1	DRAWING CREATED	10/15/2021	T.Larson

DESCRIPTION: Vault 5078x13 Slab Top 3672"C Cast-In Cover PGE Portland 39643

CASTING LAYOUT

REV: A-4

PART NUMBER:	200068084	DRAWN BY:	E. Fine
CREATED:	10/14/2021	MODIFIED:	9/13/2022

SHEET: 1 OF 2

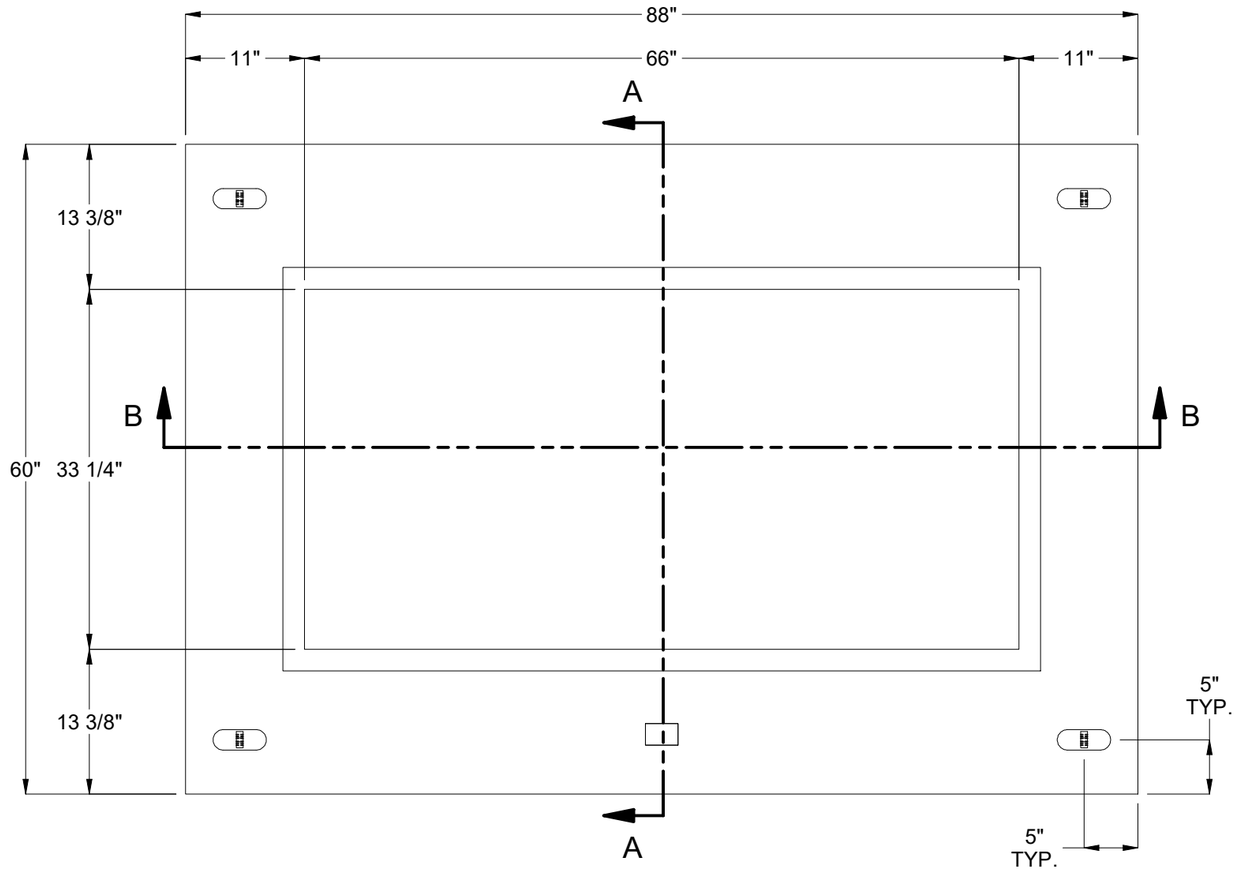

PLAN VIEW
(HATCH NOT SHOWN
FOR CLARITY)

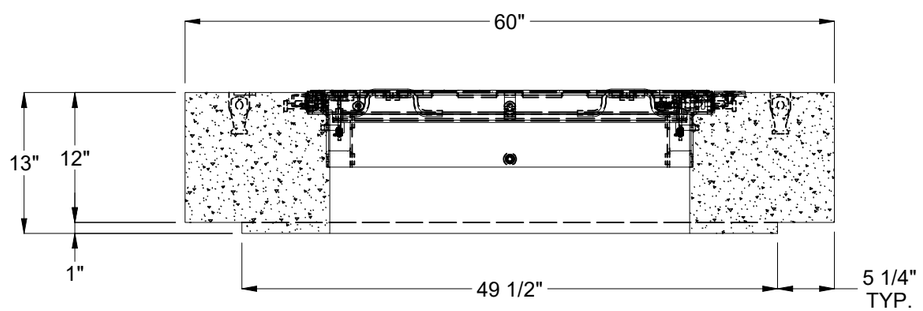

SECTION A-A

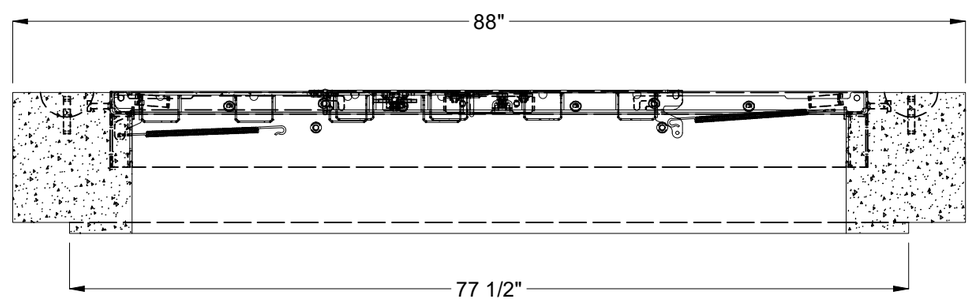

SECTION B-B

BURY DEPTH:	0.0' - 0.0' to Top		
WATER LEVEL:	5.0'	APPROX. WEIGHT:	3710.85 Lbs
DESIGN SPEC:	ASTM C857,ACI 318	LOADING SPEC:	A-16 (AASHTO HS20-44)
REINFORCEMENT TYPE:	Rebar	LIFTING TYPE:	Tech Erection Anchor

JENSEN PRECAST EST. 1968

WWW.JENSENPRECAST.COM

©2022 Jensen Precast- All rights reserved.
All materials appearing as Jensen Precast documents and the like are proprietary work product and are protected under U.S. copyright and other laws.
Unless in conjunction with business conducted with Jensen Precast, any use of Jensen Precast work product without express, written consent is prohibited, and recipient is prohibited from distributing any and all work product to non-approved third parties under penalty of civil action.

DESCRIPTION:	Vault 5078x13 Slab Top 3672"C Cast-In Cover PGE Portland 39643 CASTING DRAWING		
PART NUMBER:	200068084	DRAWN BY:	E. Fine
CREATED:	10/14/2021	MODIFIED:	9/13/2022

REV:	A-4
SHEET:	2 OF 2

200068084.idw