NOTES

- FOR COMPLETE DESIGN AND PRODUCT INFORMATION CONTACT JENSEN PRECAST.

BILL OF MATERIALS

ITEM	QTY	PART NUMBER	DESCRIPTION	MASS
1	1	100020783	Drainage 2436x72 Rect. Bottom Section Knockout 12" Sump	5379.105 lbmass
2	1	100001093	Riser 2436x12 Rect. Riser	892.160 lbmass
3	1	100001091	Riser 2436x6 Rect. Riser	441.309 lbmass
4	1	100013622	CI FRAME 21X24 I8567V ASTM A48 CL35B	213.449 lbmass
5	1	100013621	CI GRATE 17x36 8567V TYPE L VANE ASTM A48 CL35B	151.443 lbmass
6	1	100013620	CI CURB HOOD 8567V ASTM A48 CL35B FISH	118.654 lbmass

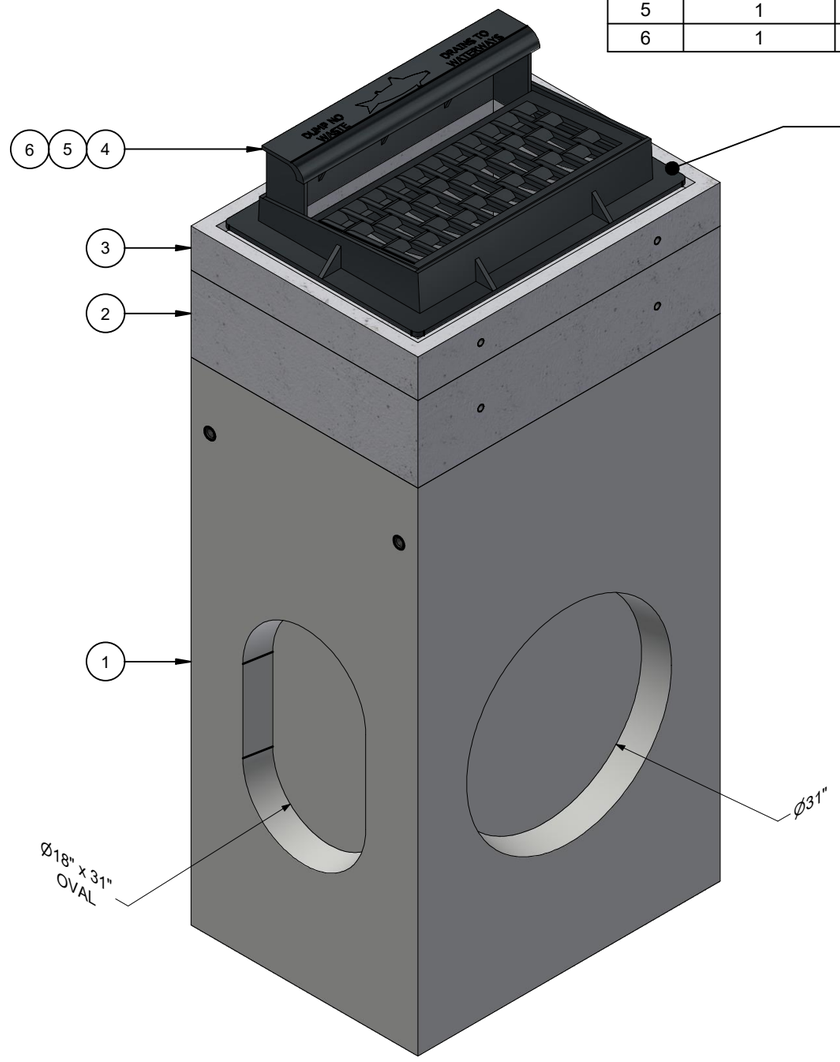

ISO VIEW

200067984.idw

CHANGE HISTORY			
NO.	DESCRIPTION	DATE	BY
1	INITIAL RELEASE	8/31/2022	EDC
2			
3			

BURY DEPTH:	0.0' - 0.0' to Top		
WATER LEVEL:	5.0'	APPROX. WEIGHT:	7196.15 Lbs
DESIGN SPEC:	ASTM C890,ACI 318	LOADING SPEC:	A-16 (AASHTO HS20-44)
REINFORCEMENT TYPE:		LIFTING TYPE:	

JENSEN PRECAST EST. 1968

WWW.JENSENPRECAST.COM

©2022 Jensen Precast- All rights reserved.
All materials appearing as Jensen Precast documents and the like are proprietary work product and are protected under U.S. copyright and other laws.
Unless in conjunction with business conducted with Jensen Precast, any use of Jensen Precast work product without express, written consent is prohibited, and recipient is prohibited from distributing any and all work product to non-approved third parties under penalty of civil action.

DESCRIPTION:	Drainage 2436 Layout Assembly 88 Assembled Wall Height CASTING LAYOUT		REV: A-2
PART NUMBER:	200067984	DRAWN BY: E CAMERON	SHEET: 1 OF 2
CREATED:	8/29/2022	MODIFIED: 8/31/2022	

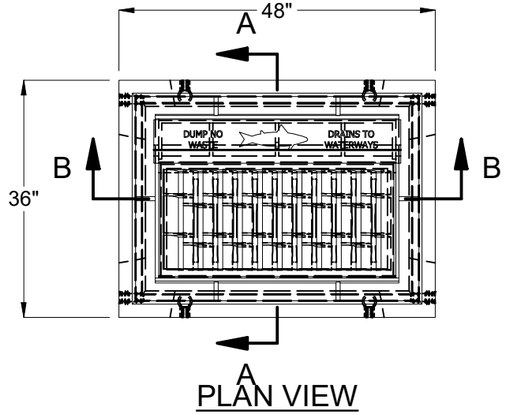

PLAN VIEW

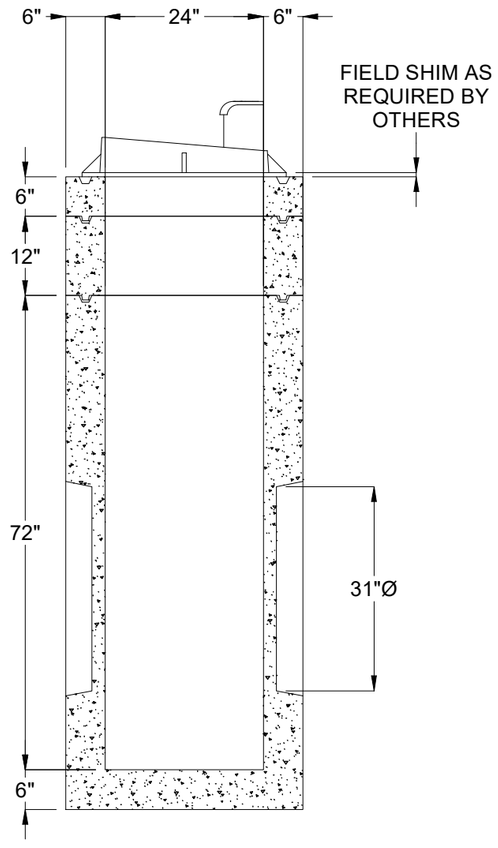

SECTION A-A

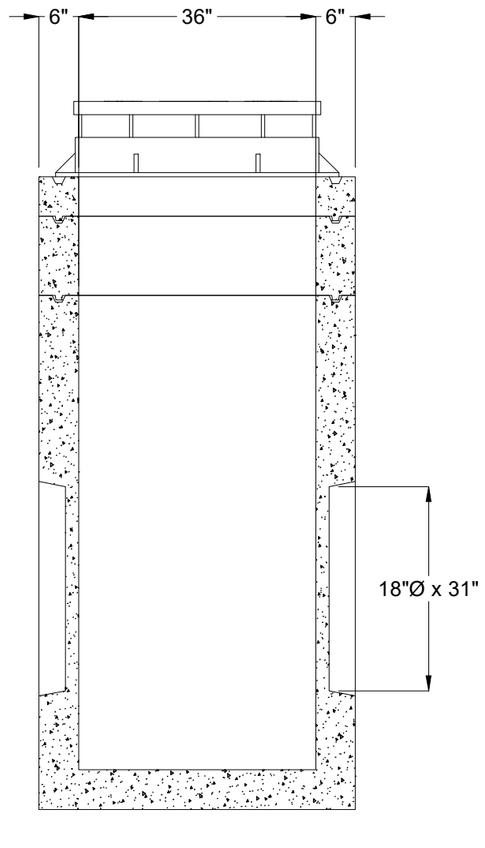

SECTION B-B

BURY DEPTH:	0.0' - 0.0' to Top		
WATER LEVEL:	5.0'	APPROX. WEIGHT:	7196.15 Lbs
DESIGN SPEC:	ASTM C890,ACI 318	LOADING SPEC:	A-16 (AASHTO HS20-44)
REINFORCEMENT TYPE:		LIFTING TYPE:	

JENSEN PRECAST EST. 1968

WWW.JENSENPRECAST.COM

©2022 Jensen Precast- All rights reserved.
All materials appearing as Jensen Precast documents and the like are proprietary work product and are protected under U.S. copyright and other laws.
Unless in conjunction with business conducted with Jensen Precast, any use of Jensen Precast work product without express, written consent is prohibited, and recipient is prohibited from distributing any and all work product to non-approved third parties under penalty of civil action.

DESCRIPTION:	Drainage 2436 Layout Assembly 88 Assembled Wall Height CASTING DRAWING		REV: A-2
PART NUMBER:	200067984	DRAWN BY:	E CAMERON
CREATED:	8/29/2022	MODIFIED:	8/31/2022
			SHEET: 2 OF 2

200067984.idw