NOTES
■ FOR COMPLETE DESIGN AND PRODUCT INFORMATION CONTACT JENSEN PRECAST.

BILL OF MATERIALS

ITEM	QTY	PART NUMBER	DESCRIPTION	MASS
1	1	100002400	Drainage D2432x46 Rnd. Bottom Section GU NC	1681.915 lbmass
2	1	100006992	CI COVER 24DIA I-3494 ASTM A-48 CL35B TYPE 1 CURB INLET	114.277 lbmass
3	1	100006993	CI CURB INLET RING 24DIA I-3494 ASTM A-48 CL35B TYPE 1	135.802 lbmass

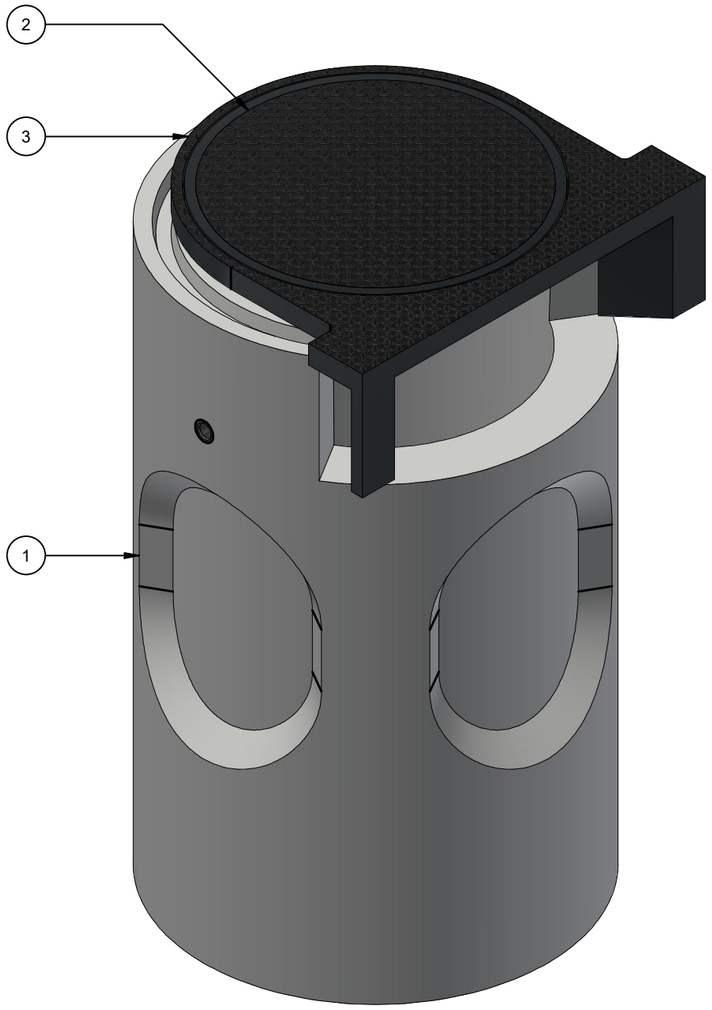

ISO VIEW

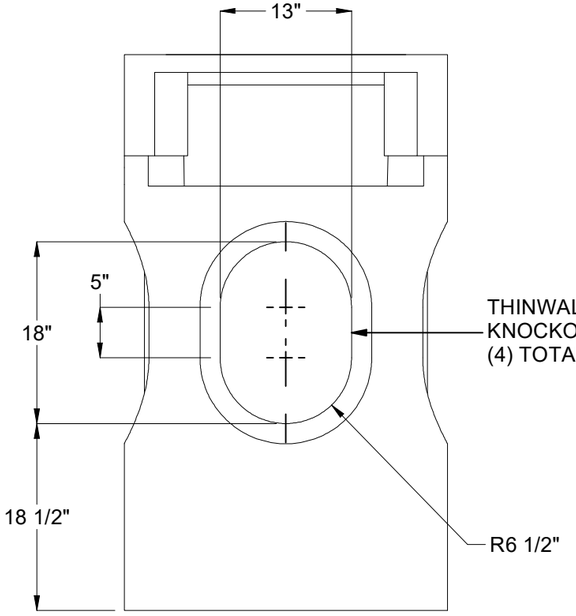

ELEVATION VIEW

200067501.idw

CHANGE HISTORY			
NO.	DESCRIPTION	DATE	BY
1	INITIAL RELEASE	8/26/2022	EDC
2			
3			

BURY DEPTH:	0.0' - 0.0' to Top		
WATER LEVEL:	Below Structure	APPROX. WEIGHT:	1931.99 Lbs
DESIGN SPEC:	ASTM C890,ASTM C478,ACI 318	LOADING SPEC:	A-03 (300 psf)
REINFORCEMENT TYPE:		LIFTING TYPE:	

JENSEN PRECAST EST. 1968

WWW.JENSENPRECAST.COM

©2022 Jensen Precast- All rights reserved.
All materials appearing as Jensen Precast documents and the like are proprietary work product and are protected under U.S. copyright and other laws.
Unless in conjunction with business conducted with Jensen Precast, any use of Jensen Precast work product without express, written consent is prohibited, and recipient is prohibited from distributing any and all work product to non-approved third parties under penalty of civil action.

DESCRIPTION:	Round Manhole D2432 Layout Assembly CASTING LAYOUT		REV: A-2
PART NUMBER:	200067501	DRAWN BY:	E CAMERON
CREATED:	8/10/2022	MODIFIED:	8/26/2022
			SHEET: 1 OF 2

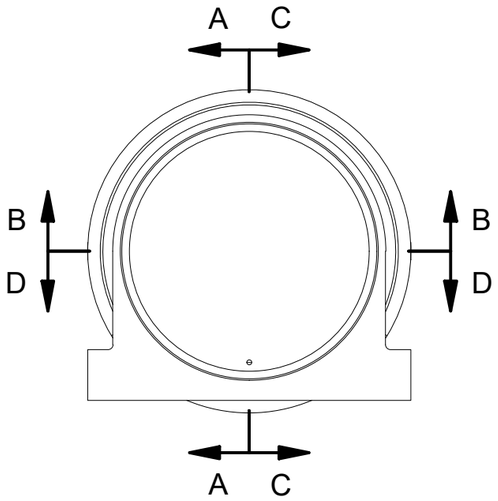

PLAN VIEW

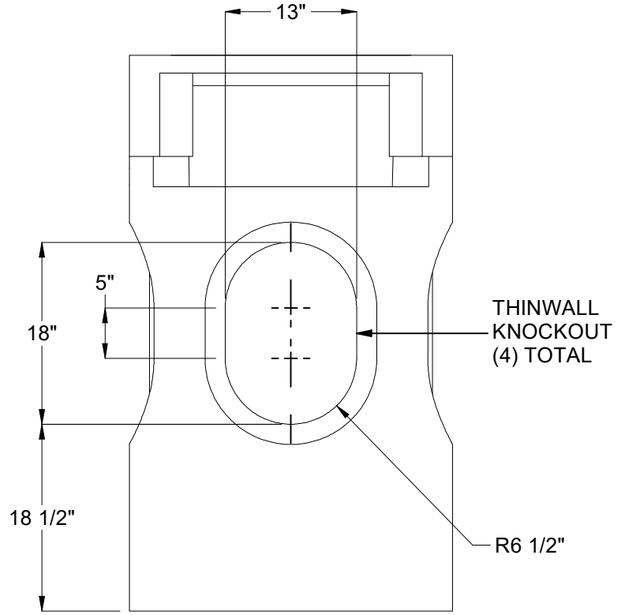

ELEVATION VIEW

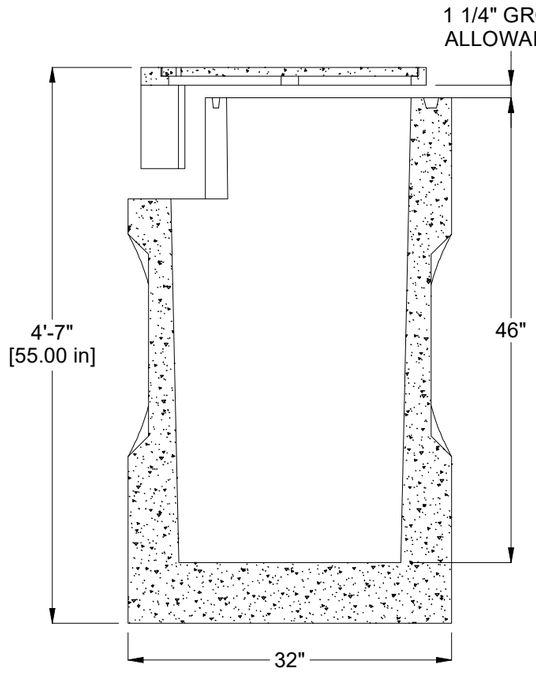

SECTION A-A

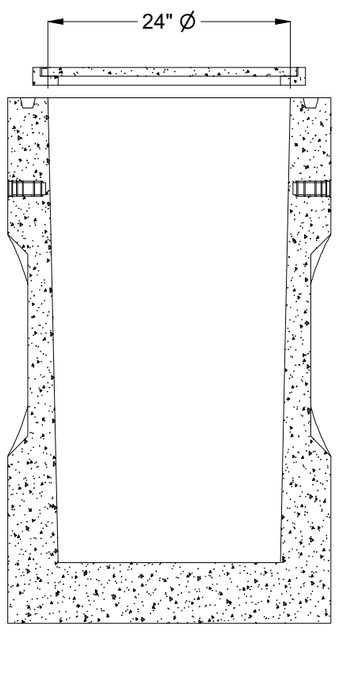

SECTION B-B

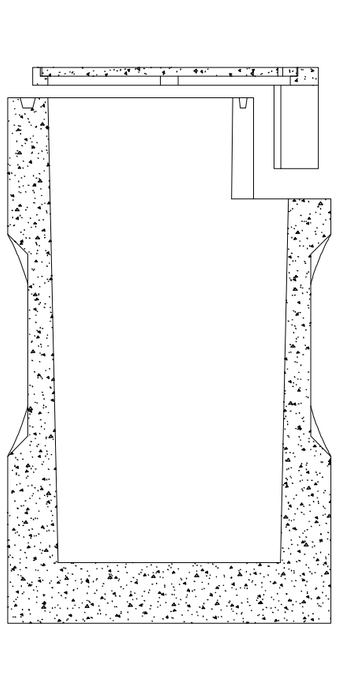

SECTION C-C

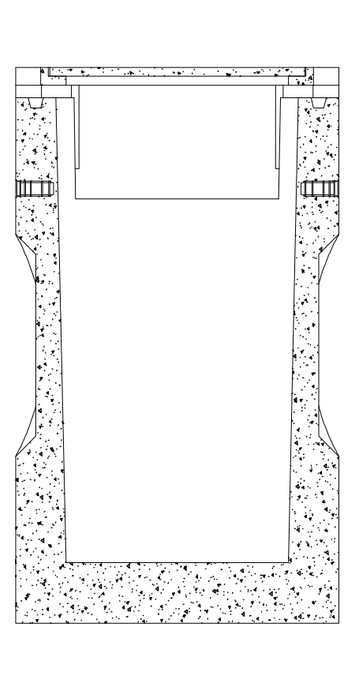

SECTION D-D

BURY DEPTH:	0.0' - 0.0' to Top		
WATER LEVEL:	Below Structure	APPROX. WEIGHT:	1931.99 Lbs
DESIGN SPEC:	ASTM C890,ASTM C478,ACI 318	LOADING SPEC:	A-03 (300 psf)
REINFORCEMENT TYPE:		LIFTING TYPE:	

JENSEN PRECAST EST. 1968

WWW.JENSENPRECAST.COM

©2022 Jensen Precast- All rights reserved.
All materials appearing as Jensen Precast documents and the like are proprietary work product and are protected under U.S. copyright and other laws.
Unless in conjunction with business conducted with Jensen Precast, any use of Jensen Precast work product without express, written consent is prohibited, and recipient is prohibited from distributing any and all work product to non-approved third parties under penalty of civil action.

DESCRIPTION:	Round Manhole D2432 Layout Assembly CASTING DRAWING		REV: A-2
PART NUMBER:	200067501	DRAWN BY:	E CAMERON
CREATED:	8/10/2022	MODIFIED:	8/26/2022
			SHEET: 2 OF 2

200067501.idw