DESIGN NOTES
■ DESIGNED IN ACCORDANCE WITH A-16 (HS20-44) LOADING USING 7000 PSI COMPRESSIVE STRENGTH CONCRETE AND 60,000 PSI YIELD STRENGTH ASTM A-706 STEEL REINFORCEMENT PER CALCS. #2207-53071
■ CUSTOMER TO GROUT & SEAL VAULT AND HOLES. JENSEN TO PROVIDE SEALING MATERIALS AS NEEDED.
■ SEE BOTTOM SECTION CASTING DRAWING 200066597 FOR ALLOWED CORE HOLE REGIONS (DONE BY OTHERS)
■ FOR COMPLETE DESIGN AND PRODUCT INFORMATION CONTACT JENSEN PRECAST.

BILL OF MATERIALS

ITEM	QTY	PART NUMBER	DESCRIPTION
1	1	200066597	Vault 5050x38 Rect. Bottom Section
2	1	200066601	Riser 5050x11 Rect. Riser
3	1	200066611	Vault 5050x9 Slab Top 31"x31"C

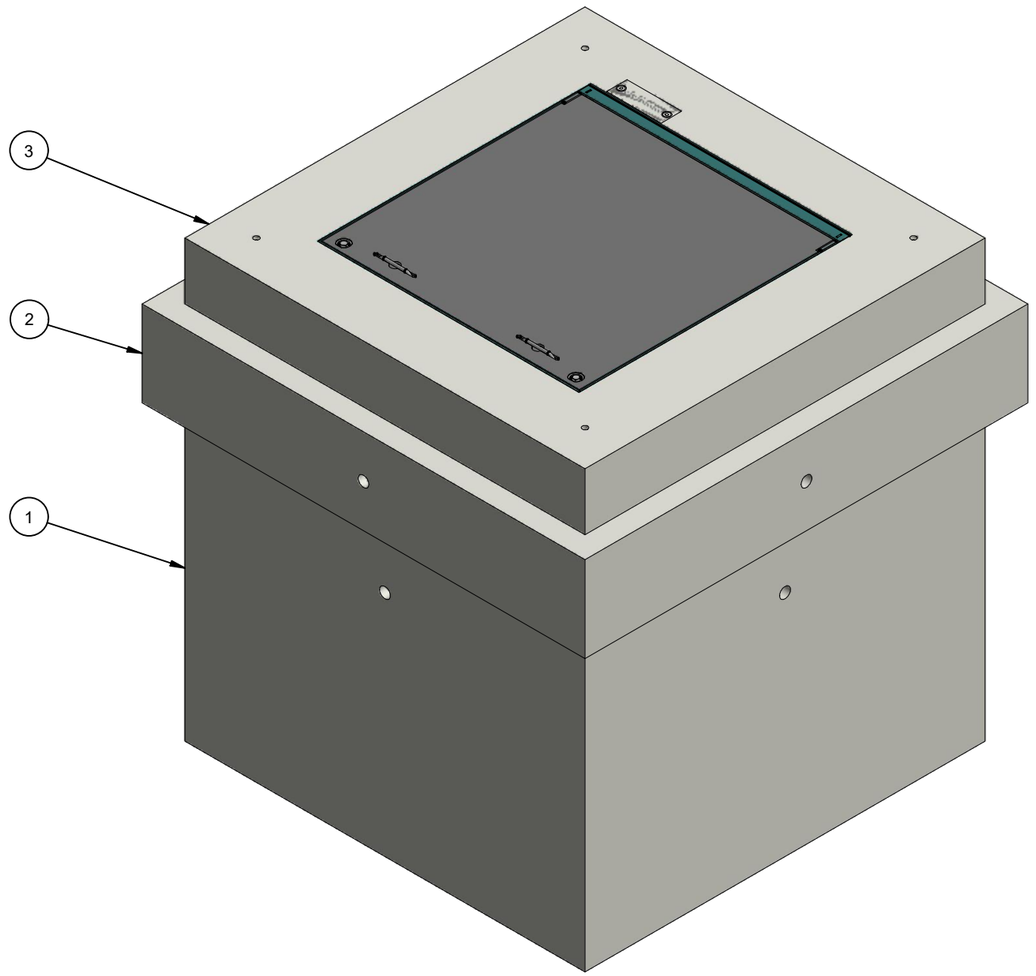

ISO VIEW

200066960.idw

CHANGE HISTORY			
NO.	DESCRIPTION	DATE	BY
1	INITIAL RELEASE	8/3/2022	JW

BURY DEPTH:	0.0' - 0.0' to Top		
WATER LEVEL:	5.0'	APPROX. WEIGHT:	6398.38 Lbs
DESIGN SPEC:	ASTM C857,ACI 318	LOADING SPEC:	A-16 (AASHTO HS20-44)
AGENCY:		AGENCY SPEC:	

JENSEN PRECAST EST. 1968

WWW.JENSENPRECAST.COM

©2022 Jensen Precast- All rights reserved.
All materials appearing as Jensen Precast documents and the like are proprietary work product and are protected under U.S. copyright and other laws.
Unless in conjunction with business conducted with Jensen Precast, any use of Jensen Precast work product without express, written consent is prohibited, and recipient is prohibited from distributing any and all work product to non-approved third parties under penalty of civil action.

DESCRIPTION:	Vault 5050 Layout Assembly (2207-53071) LAYOUT REVIEW		REV: A-2
PART NUMBER:	200066960	DRAWN BY:	J. Warren
CREATED:	7/25/2022	MODIFIED:	8/3/2022
			SHEET: 1 OF 2

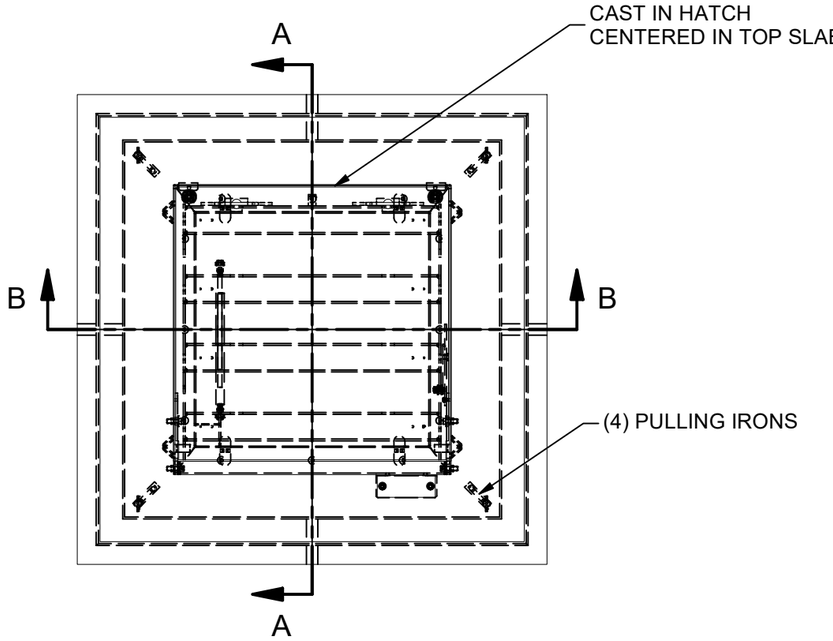

PLAN VIEW

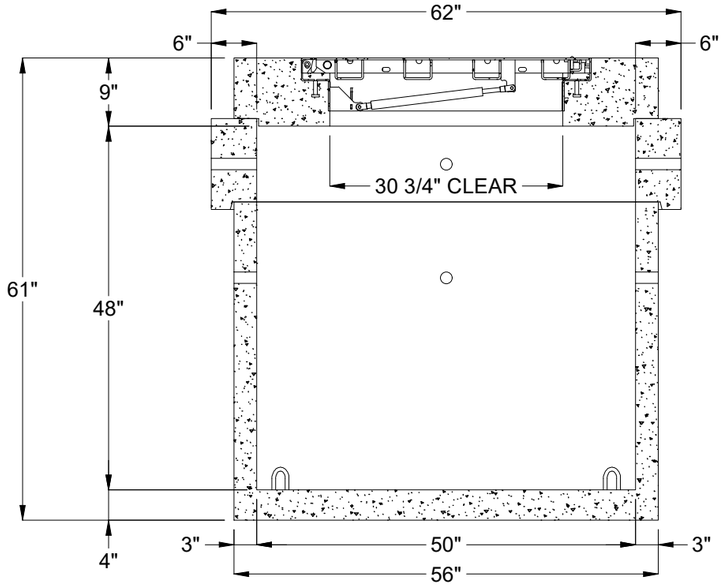

SECTION A-A

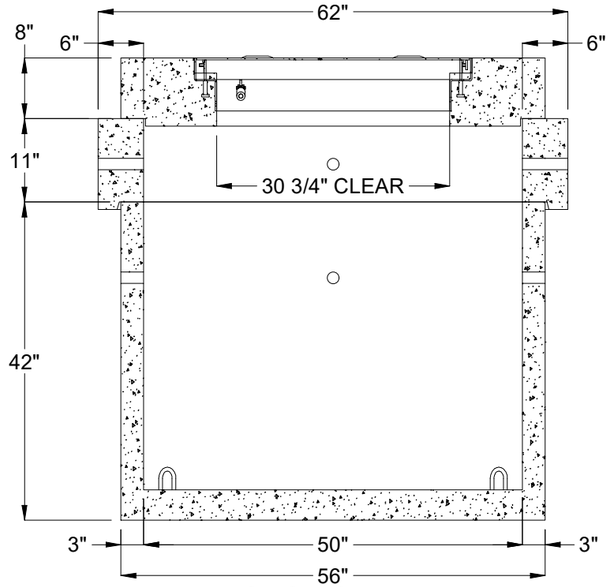

SECTION B-B

BURY DEPTH:	0.0' - 0.0' to Top		
WATER LEVEL:	5.0'	APPROX. WEIGHT:	6398.38 Lbs
DESIGN SPEC:	ASTM C857,ACI 318	LOADING SPEC:	A-16 (AASHTO HS20-44)
AGENCY:		AGENCY SPEC:	

JENSEN PRECAST EST. 1968

WWW.JENSENPRECAST.COM

©2022 Jensen Precast- All rights reserved.
All materials appearing as Jensen Precast documents and the like are proprietary work product and are protected under U.S. copyright and other laws.
Unless in conjunction with business conducted with Jensen Precast, any use of Jensen Precast work product without express, written consent is prohibited, and recipient is prohibited from distributing any and all work product to non-approved third parties under penalty of civil action.

DESCRIPTION:	Vault 5050 Layout Assembly (2207-53071) LAYOUT DRAWING		REV: A-2
PART NUMBER:	200066960	DRAWN BY:	J. Warren
CREATED:	7/25/2022	MODIFIED:	8/3/2022
			SHEET: 2 OF 2

200066960.idw