NOTES
CULVERT HEADWALL
DESIGN PER CITY OF SPARKS STANDARD DETAILS FOR PUBLIC WORKS CONSTRUCTION, DRAWING NO. S-213. JENSEN PRECAST ASSUMES NO RESPONSIBILITY FOR THE STRUCTURAL DESIGN OF THE CULVERT HEADWALL.

BILL OF MATERIALS

ITEM	UNIT QTY	QTY	PART NUMBER	DESCRIPTION
1	32.775 ft^3	32.775 ft^3	100011425	CONCRETE MIX GENERIC 5000 PSI
2	1	2	100002877	ANCHOR DOGBONE P52 4T X 9-1/2" GALV
3	1	1	300150913	REINFORCING MAT 300150913

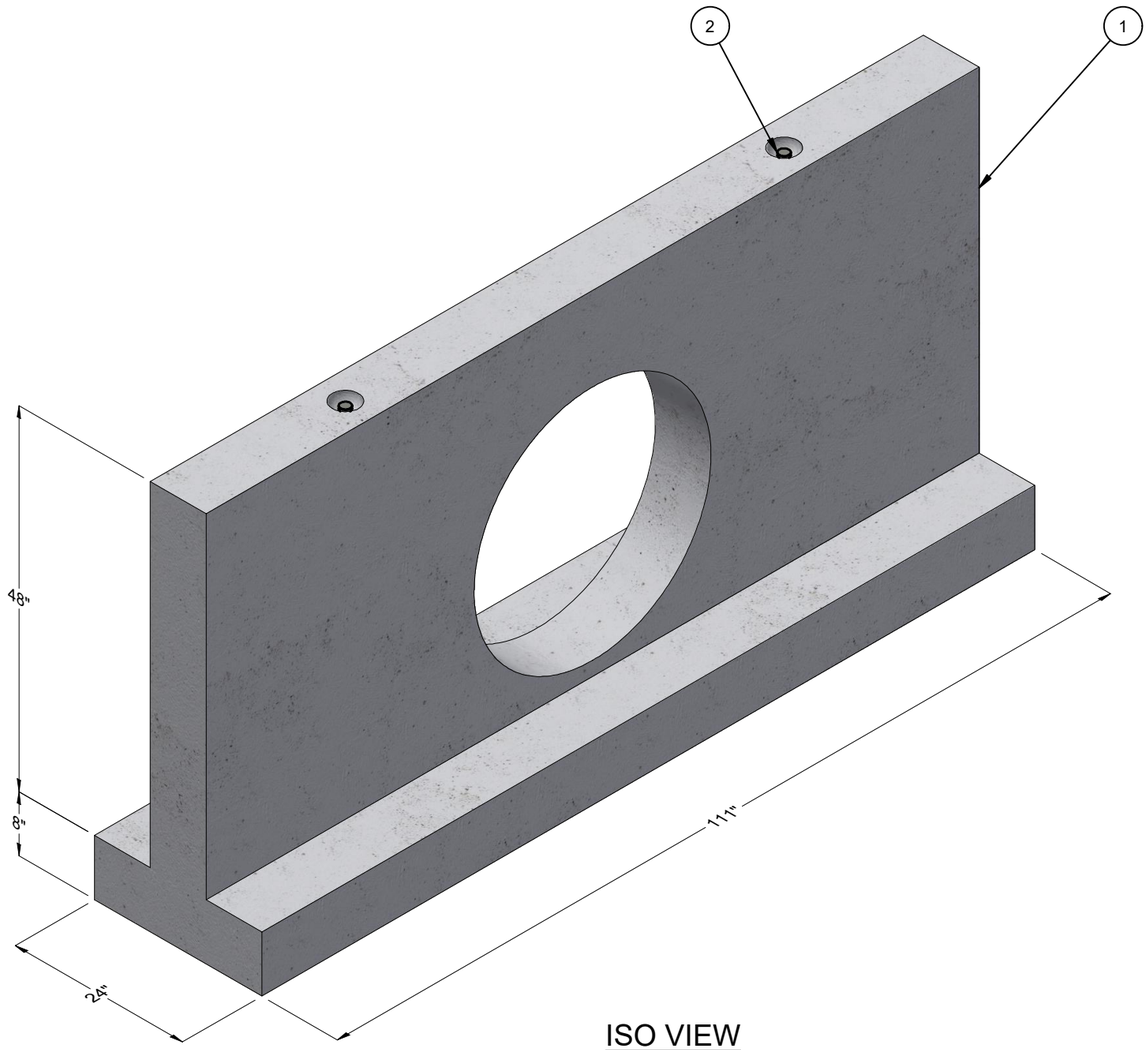

ISO VIEW

LIFTING NOTES
■ THIS CONCRETE PRODUCT IS DESIGNED TO BE LIFTED AT 2500PSI WITH 2 LIFT CONNECTIONS EQUALLY LOADED TO 2 LIFTING POINTS AT A MINIMUM 60° SLING ANGLE, MEASURED FROM HORIZONTAL.

CHANGE HISTORY			
NO.	DESCRIPTION	DATE	BY
1	INITIAL RELEASE	6/17/2022	MM
2			
3			

BURY DEPTH:	N/A to N/A		
WATER LEVEL:	N/A	APPROX. WEIGHT:	4934.56 Lbs
DESIGN SPEC:	N/A	LOADING SPEC:	Agency Specified
REINFORCEMENT TYPE:	Rebar	LIFTING TYPE:	Dogbone

JENSEN PRECAST EST. 1968

WWW.JENSENPRECAST.COM

©2022 Jensen Precast- All rights reserved.
All materials appearing as Jensen Precast documents and the like are proprietary work product and are protected under U.S. copyright and other laws.
Unless in conjunction with business conducted with Jensen Precast, any use of Jensen Precast work product without express, written consent is prohibited, and recipient is prohibited from distributing any and all work product to non-approved third parties under penalty of civil action.

DESCRIPTION:	24"x111"x48" Headwall CASTING LAYOUT	REV:	A-5
PART NUMBER:	200066905	DRAWN BY:	M. Montez
CREATED:	7/21/2022	MODIFIED:	8/4/2022
		SHEET:	1 OF 2

200066905.idw

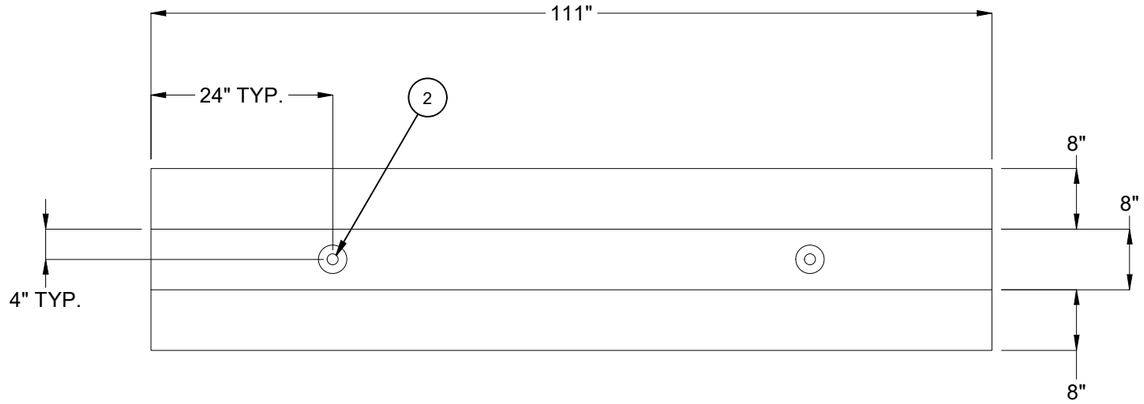

PLAN VIEW

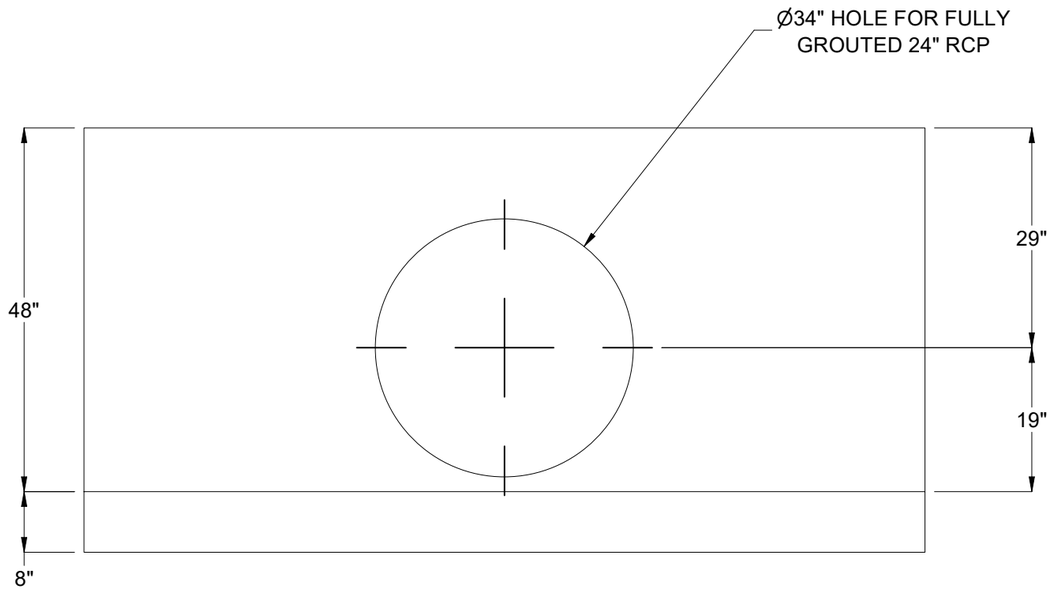

ELEVATION VIEW

BURY DEPTH:	N/A to N/A			DESCRIPTION: 24"x111"x48" Headwall CASTING DRAWING	REV: A-5
WATER LEVEL:	N/A	APPROX. WEIGHT:	4934.56 Lbs		
DESIGN SPEC:	N/A	LOADING SPEC:	Agency Specified		SHEET: 2 OF 2
REINFORCEMENT TYPE:	Rebar	LIFTING TYPE:	Dogbone	PART NUMBER: 200066905 / DRAWN BY: M. Montez	
				CREATED: 7/21/2022 / MODIFIED: 8/4/2022	

JENSEN PRECAST EST. 1968

WWW.JENSENPRECAST.COM

©2022 Jensen Precast- All rights reserved.
All materials appearing as Jensen Precast documents and the like are proprietary work product and are protected under U.S. copyright and other laws.
Unless in conjunction with business conducted with Jensen Precast, any use of Jensen Precast work product without express, written consent is prohibited, and recipient is prohibited from distributing any and all work product to non-approved third parties under penalty of civil action.

200066905.idw