NOTES
■ FOR COMPLETE DESIGN AND PRODUCT INFORMATION CONTACT JENSEN PRECAST.

BILL OF MATERIALS

ITEM	QTY	PART NUMBER	DESCRIPTION
1	52.400 ft^3	100011425	CONCRETE MIX GENERIC 5000 PSI
2	8	100034833	ANCHOR RAPID LIFT TECH 2.5T CLUTCH 2.4375IN LONG MB RL-25
3	1	200061339	REINFORCING MAT 200061339
4	1	100005933	GROUND INSERTS BOTTLE ROCKET BRASS 1/2X16 STEEL ROD 12G69
5	1	100024063	GROUND CLAMP BRONZE 1/2-1 BLACKBURN TYPE J
6	4	100003033	PULL IRON OFFSET .875DIA 6 IH X 10.875L X 6.75W 316SS

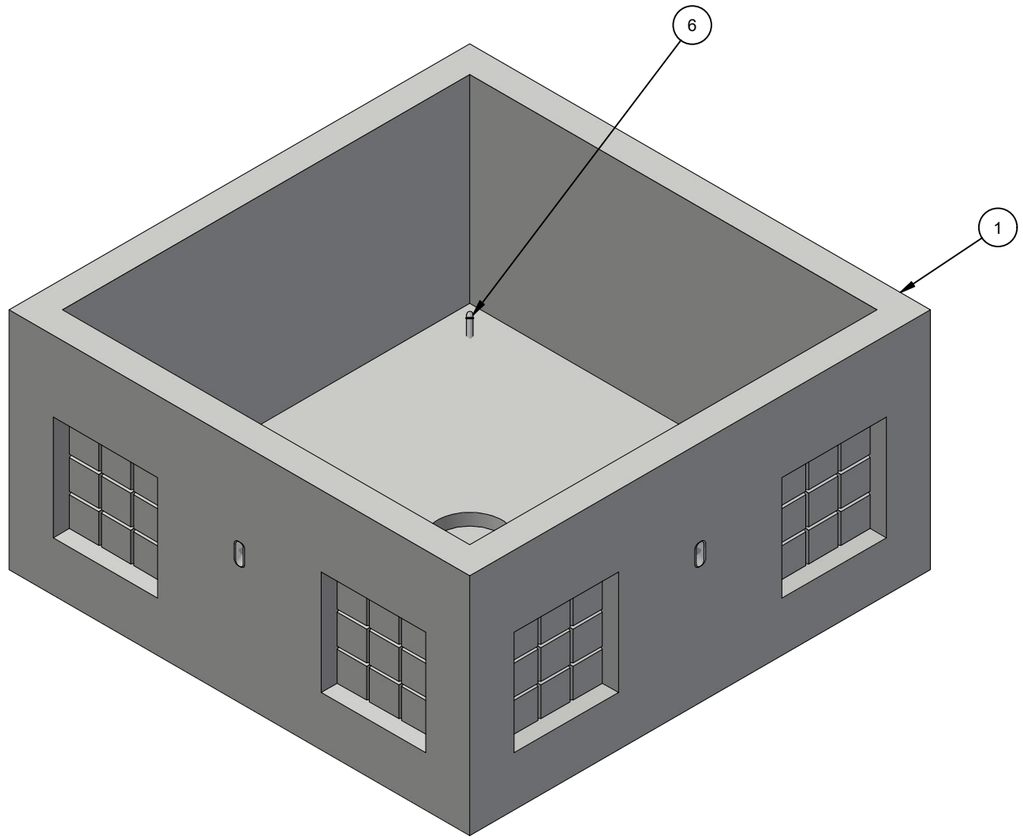

ISO LAYOUT

LIFTING NOTES
■ DEMOLDING: THIS CONCRETE PRODUCT IS DESIGNED TO BE LIFTED AT 3500 PSI WITH 4 LIFT CONNECTIONS EQUALLY LOADED TO 4 LIFTING POINTS AT A MINIMUM 60° SLING ANGLE, MEASURED FROM HORIZONTAL.
■ INSTALLATION: THIS CONCRETE PRODUCT IS DESIGNED TO BE LIFTED AT 3500 PSI WITH 4 LIFT CONNECTIONS EQUALLY LOADED TO 4 LIFTING POINTS AT A MINIMUM 90° SLING ANGLE, MEASURED FROM HORIZONTAL.

REVISION HISTORY			
NO.	DESCRIPTION	DATE	BY
1	INITIAL RELEASE	3/28/2022	JW
2	ADDED BOTTLE ROCKET	4/26/2022	JW

BURY DEPTH:	0.5' - 0.5' to Top		
WATER LEVEL:	5.0'	APPROX. WEIGHT:	7896.77 Lbs
DESIGN SPEC:	ASTM C857,ACI 318	LOADING SPEC:	A-16 (AASHTO HS20-44)
REINFORCEMENT TYPE:	Rebar	LIFTING TYPE:	Tech Erection Anchor

JENSEN PRECAST EST. 1968

WWW.JENSENPRECAST.COM

©2022 Jensen Precast- All rights reserved.
All materials appearing as Jensen Precast documents and the like are proprietary work product and are protected under U.S. copyright and other laws.
Unless in conjunction with business conducted with Jensen Precast, any use of Jensen Precast work product without express, written consent is prohibited, and recipient is prohibited from distributing any and all work product to non-approved third parties under penalty of civil action.

DESCRIPTION:	Vault 7676x37 Rect. Bottom Section Knockout Sump CASTING LAYOUT		REV: A-1
PART NUMBER:	200066480	DRAWN BY:	A.Cho
CREATED:	4/19/2018	MODIFIED:	7/11/2022
			SHEET: 1 OF 2

200066480.idw

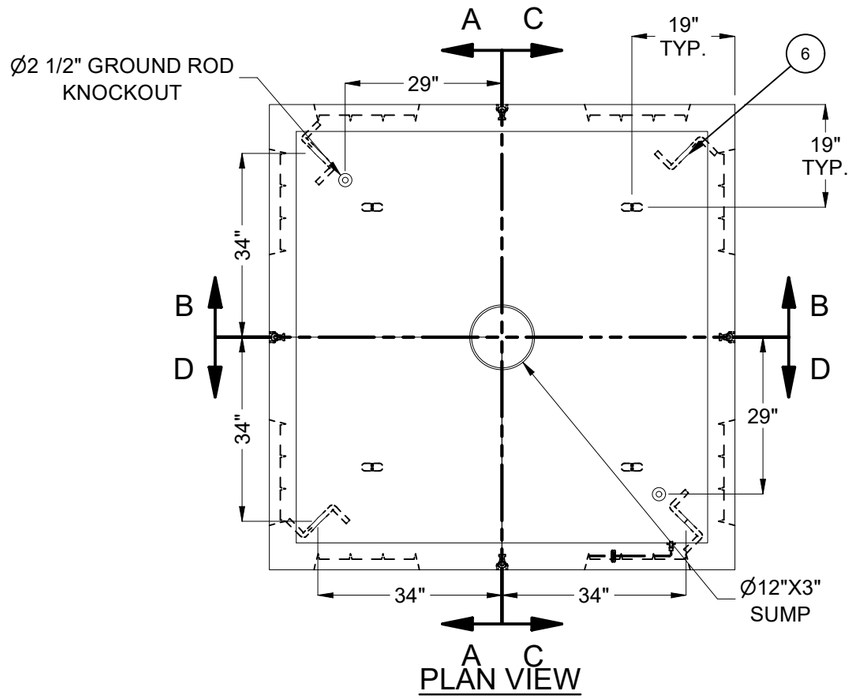

PLAN VIEW

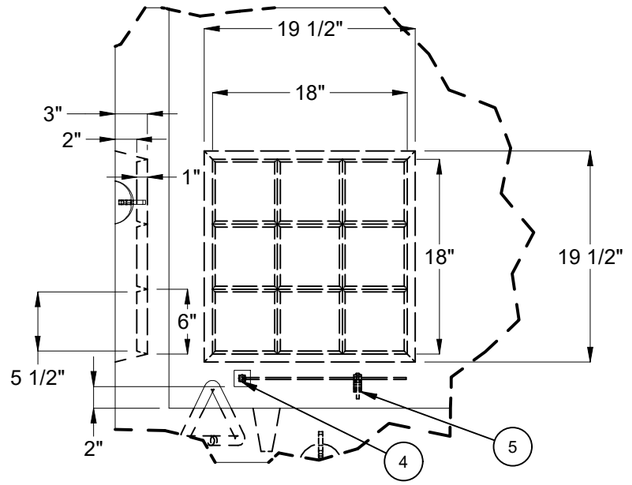

KNOCKOUT DETAIL E

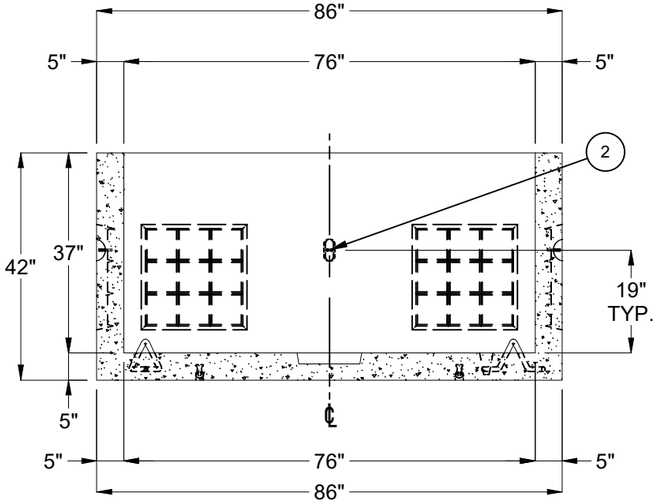

SECTION A-A

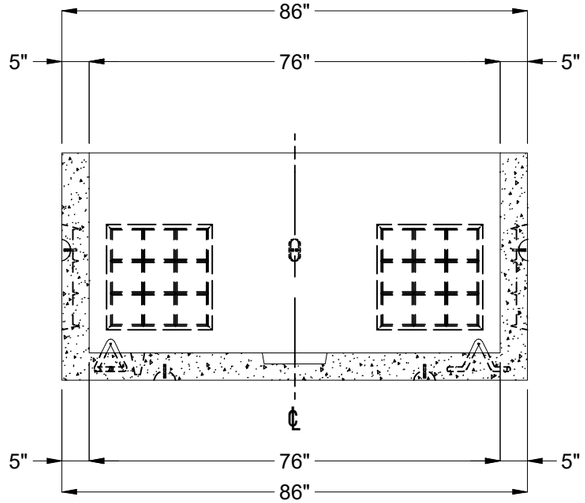

SECTION B-B

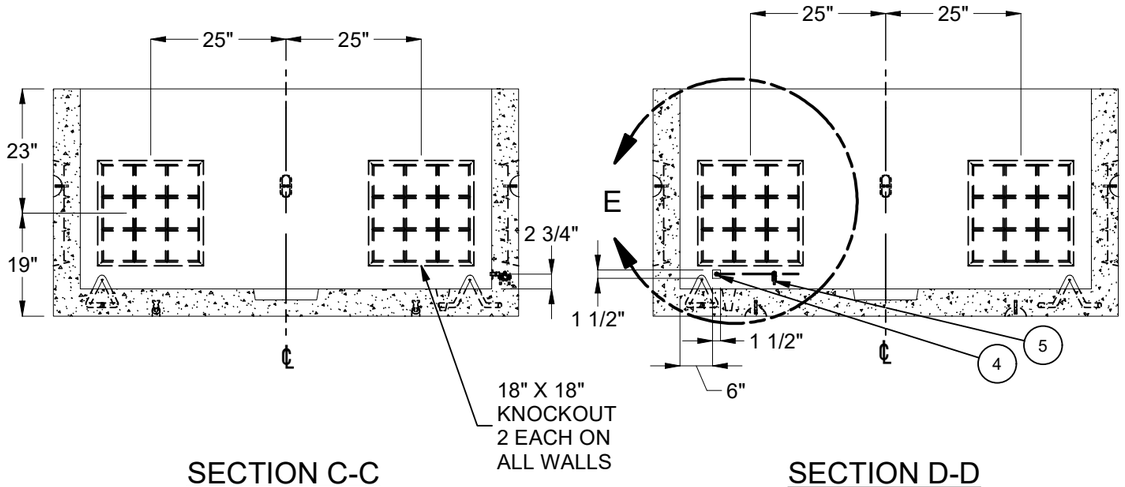

SECTION C-C SECTION D-D

BURY DEPTH:	0.5' - 0.5' to Top		
WATER LEVEL:	5.0'	APPROX. WEIGHT:	7896.77 Lbs
DESIGN SPEC:	ASTM C857,ACI 318	LOADING SPEC:	A-16 (AASHTO HS20-44)
REINFORCEMENT TYPE:	Rebar	LIFTING TYPE:	Tech Erection Anchor

JENSEN PRECAST EST. 1968

WWW.JENSENPRECAST.COM

©2022 Jensen Precast- All rights reserved.
All materials appearing as Jensen Precast documents and the like are proprietary work product and are protected under U.S. copyright and other laws.
Unless in conjunction with business conducted with Jensen Precast, any use of Jensen Precast work product without express, written consent is prohibited, and recipient is prohibited from distributing any and all work product to non-approved third parties under penalty of civil action.

DESCRIPTION:	Vault 7676x37 Rect. Bottom Section Knockout Sump CASTING DRAWING		REV: A-1
PART NUMBER:	200066480	DRAWN BY:	A.Cho
CREATED:	4/19/2018	MODIFIED:	7/11/2022
			SHEET: 2 OF 2

200066480.idw