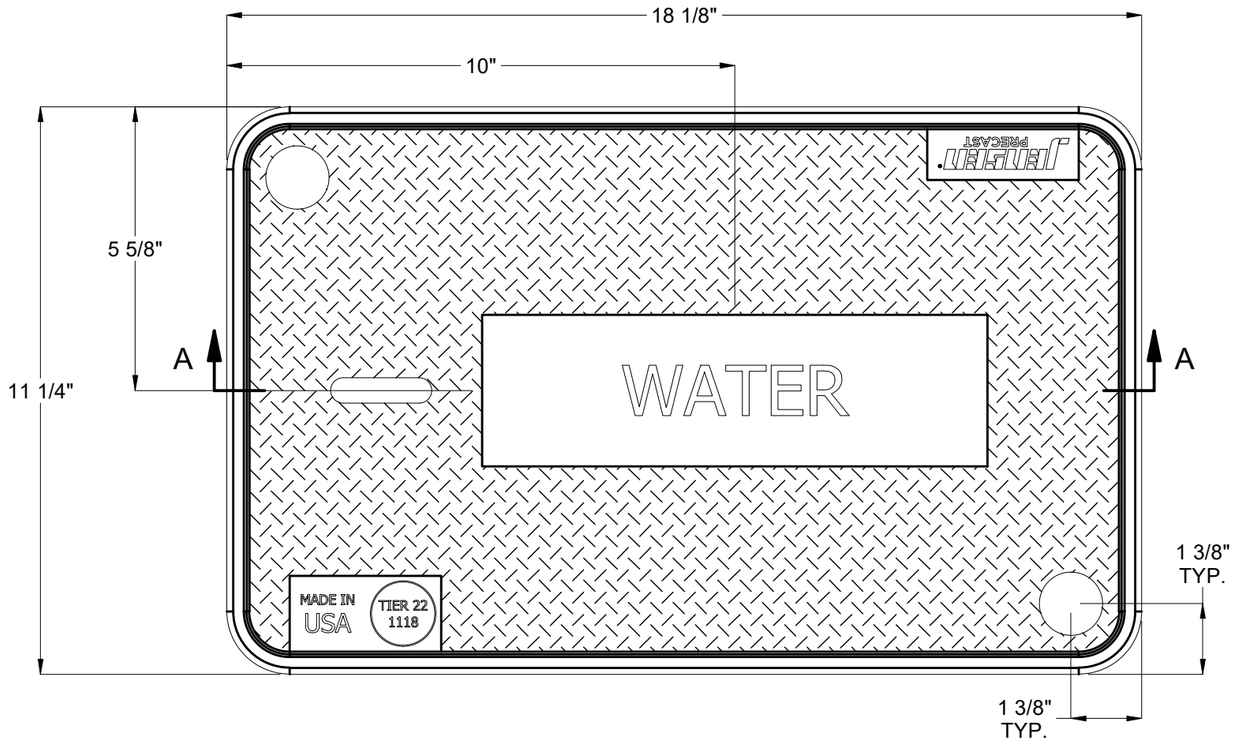

BILL OF MATERIALS

ITEM	UNIT QTY	QTY	PART NUMBER	DESCRIPTION
1	0.192 ft^3	0.192 ft^3	100035039	CONCRETE COMPOSITE LID MIX BRUCE
3	0.335 lbmass	0.671 lbmass	100008157	Combo Mat Fiber Reinforcing 24 Oz

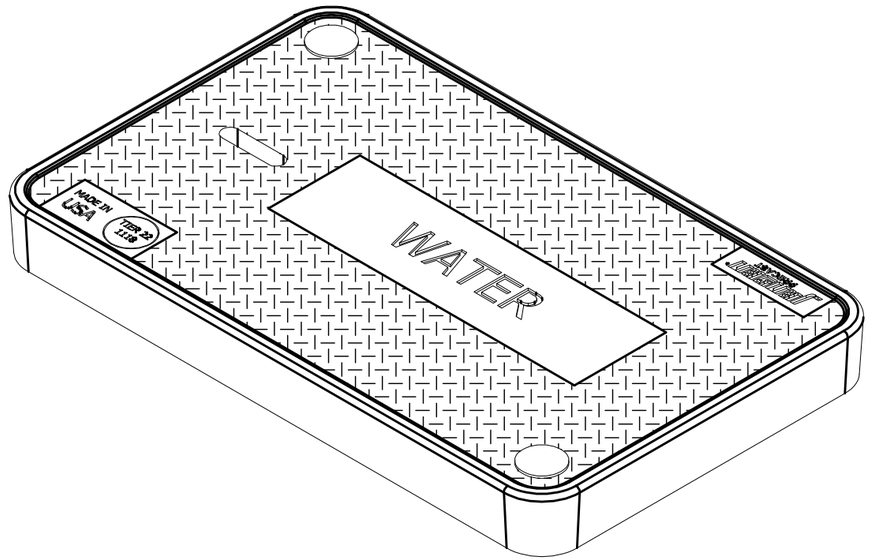

200066085.idw

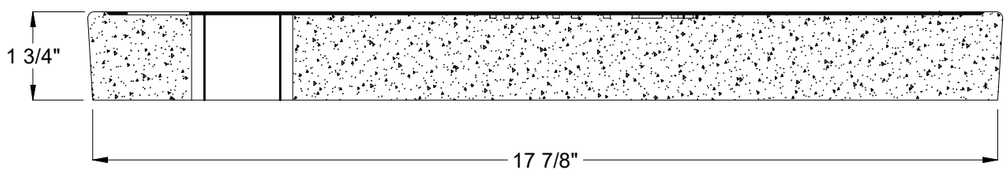

SECTION A-A

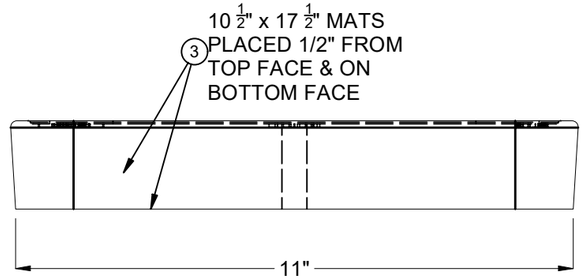

END VIEW

REVISION HISTORY			
REV	DESCRIPTION	DATE	BY
A	INITIAL RELEASE	6/23/22	DJM
B	CHANGED LIFTING TYPE	8/17/22	DJM

DESIGN SPEC: ANSI/SCTE-77	APPROX. WEIGHT: 23.75 lbs		
AGENCY:	DESIGN/TEST LOAD: 22.5/33.75 kip		
AGENCY SPEC:	LOADING SPEC: Tier-22		

JENSEN PRECAST EST. 1968

©2022 Jensen Precast- All rights reserved.
Unless expressly authorized by Jensen Precast any use or duplication is strictly prohibited under penalty of civil action or codes.

DESCRIPTION: HPC 1118 Polymer Cover, Tier-22, Non-Bolt Down, WATER

REV: B-1

PART #:	200066085	DRAWN BY:	D. Morgan
CREATED:	2/19/2019	MODIFIED:	8/17/2022

SHEET: 1 OF 1