BILL OF MATERIALS

ITEM	QTY	PART NUMBER	DESCRIPTION
1	3	100009976	PIPE FITTING PVC SDR35 SAN TEE 4DIA
2	107.250 in	100002510	PIPE PVC 4IN DIA SDR35 ASTM D-3034 SOLVENT WELD SEWER DRAIN

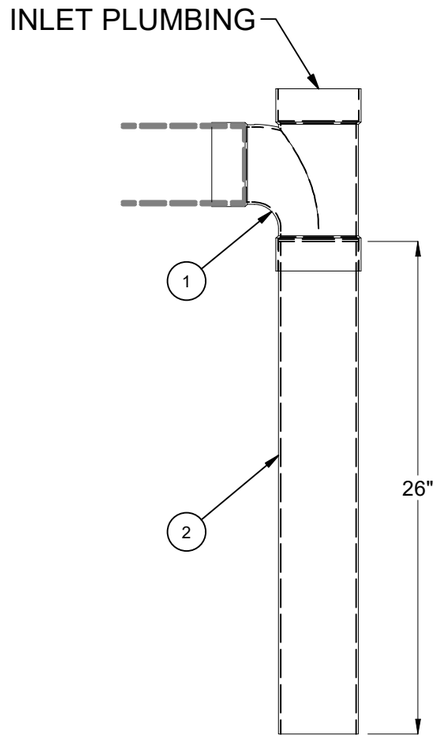

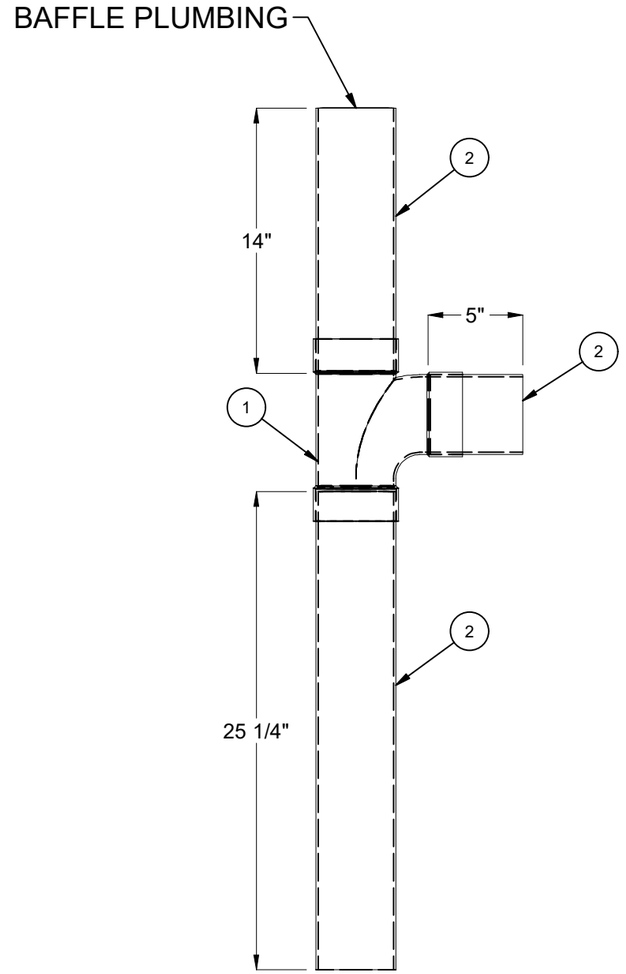

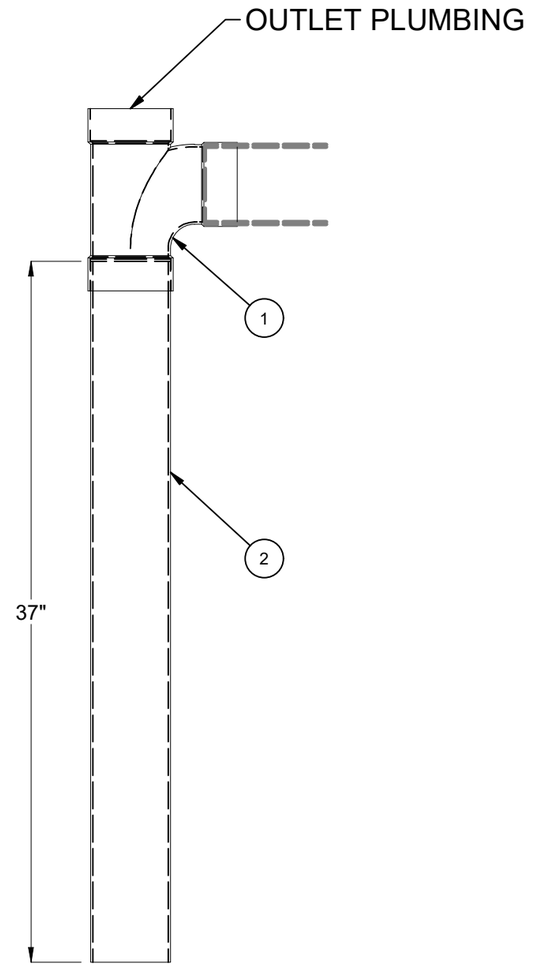

ELEVATION VIEW

200065591.idw

BURY DEPTH:	to			DESCRIPTION: 200065590 Plumbing - JP 1200 4 Inch Grease Interceptor 24"E, 24"C, 24"E Single Baffle PLUMBING LAYOUT	REV: A-1
WATER LEVEL:	APPROX. WEIGHT: 10.06 Lbs	JENSEN PRECAST EST. 1968 WWW.JENSENPRECAST.COM	©2022 Jensen Precast- All rights reserved. All materials appearing as Jensen Precast documents and the like are proprietary work product and are protected under U.S. copyright and other laws. Unless in conjunction with business conducted with Jensen Precast, any use of Jensen Precast work product without express, written consent is prohibited, and recipient is prohibited from distributing any and all work product to non-approved third parties under penalty of civil action.	PART NUMBER: 200065591 / DRAWN BY: E. Fine	SHEET: 1 OF 1
DESIGN SPEC:	LOADING SPEC:			CREATED: 2/4/2021 / MODIFIED: 7/7/2022	
AGENCY:	AGENCY SPEC:				