NOTES
■ FOR COMPLETE DESIGN AND PRODUCT INFORMATION CONTACT JENSEN PRECAST.

BILL OF MATERIALS

ITEM	UNIT QTY	QTY	PART NUMBER	DESCRIPTION
1	20.295 ft^3	20.295 ft^3	100011425	CONCRETE MIX GENERIC 5000 PSI
2	1	4	100004878	ANCHOR UTILITY .671DIA 5-SLAB GALV P75 5UA671
3	1	1	300150538	REINFORCING MAT 300150538

200065334.idw

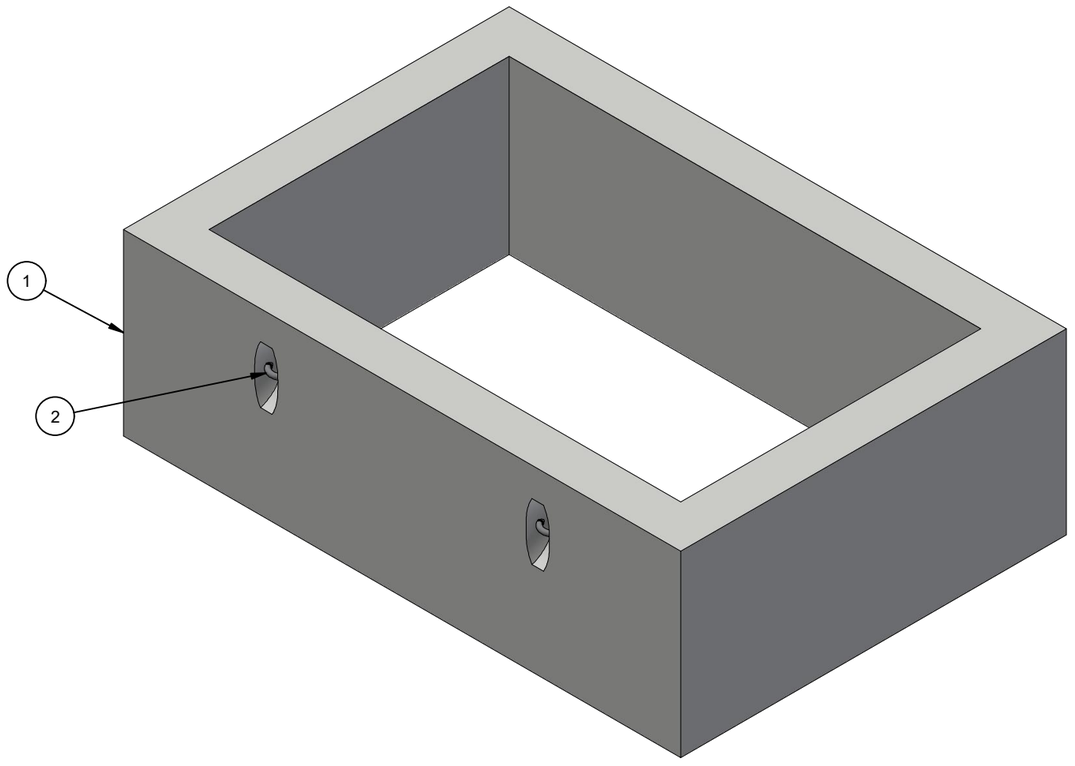

ISO VIEW

LIFTING NOTES
■ THIS CONCRETE PRODUCT IS DESIGNED TO BE LIFTED AT 2500 PSI WITH 4 LIFT CONNECTIONS EQUALLY LOADED TO 2 LIFTING POINTS AT A MINIMUM 90° SLING ANGLE, MEASURED FROM HORIZONTAL.

BURY DEPTH:	0.0' - 1.0' to Top		
WATER LEVEL:	5.0'	APPROX. WEIGHT:	3053.91 Lbs
DESIGN SPEC:	ASTM C857,ACI 318	LOADING SPEC:	A-16 (AASHTO HS20-44)
REINFORCEMENT TYPE:	Rebar	LIFTING TYPE:	A-Anchor

JENSEN PRECAST EST. 1968

WWW.JENSENPRECAST.COM

©2022 Jensen Precast- All rights reserved.
All materials appearing as Jensen Precast documents and the like are proprietary work product and are protected under U.S. copyright and other laws.
Unless in conjunction with business conducted with Jensen Precast, any use of Jensen Precast work product without express, written consent is prohibited, and recipient is prohibited from distributing any and all work product to non-approved third parties under penalty of civil action.

CHANGE HISTORY

NO.	DESCRIPTION	DATE	BY
1	INITIAL RELEASE	6/8/2022	JW

DESCRIPTION: Riser 4266x24 Rect. Riser

CASTING LAYOUT

REV: A-2

PART NUMBER:	200065334	DRAWN BY:	J. Warren
CREATED:	6/7/2022	MODIFIED:	6/8/2022

SHEET: 1 OF 2

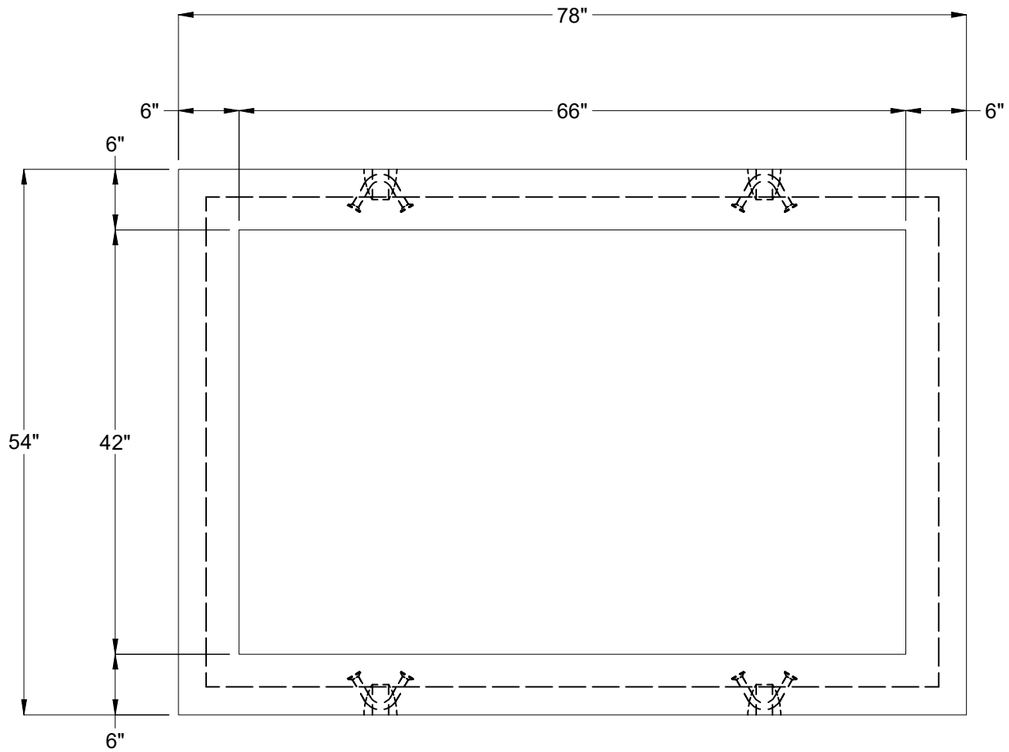

PLAN VIEW

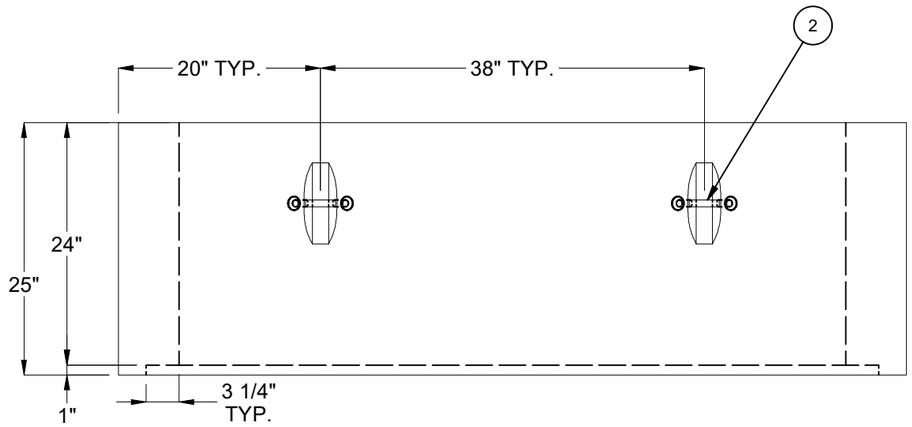

SIDE PROFILE VIEW

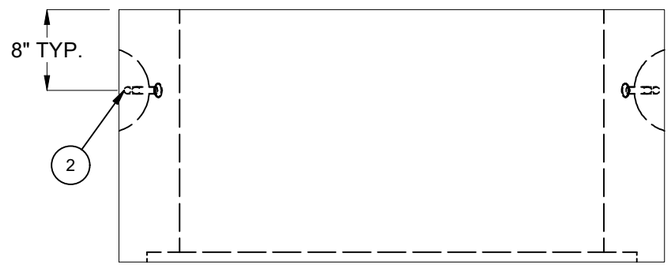

END PROFILE VIEW

BURY DEPTH:	0.0' - 1.0' to Top		
WATER LEVEL:	5.0'	APPROX. WEIGHT:	3053.91 Lbs
DESIGN SPEC:	ASTM C857,ACI 318	LOADING SPEC:	A-16 (AASHTO HS20-44)
REINFORCEMENT TYPE:	Rebar	LIFTING TYPE:	A-Anchor

JENSEN PRECAST EST. 1968

WWW.JENSENPRECAST.COM

©2022 Jensen Precast- All rights reserved.
All materials appearing as Jensen Precast documents and the like are proprietary work product and are protected under U.S. copyright and other laws.
Unless in conjunction with business conducted with Jensen Precast, any use of Jensen Precast work product without express, written consent is prohibited, and recipient is prohibited from distributing any and all work product to non-approved third parties under penalty of civil action.

DESCRIPTION:	Riser 4266x24 Rect. Riser CASTING DRAWING		REV: A-2
PART NUMBER:	200065334	DRAWN BY:	J. Warren
CREATED:	6/7/2022	MODIFIED:	6/8/2022
			SHEET: 2 OF 2

200065334.idw