BILL OF MATERIALS

ITEM	UNIT QTY	QTY	PART NUMBER	DESCRIPTION
1	0.192 ft^3	0.192 ft^3	100035039	CONCRETE COMPOSITE LID MIX BRUCE
2	0.333 ft	0.333 ft	100008155	REINF ROD SMOOTH PENCIL #2 1/4 SS
3	1	1	100041390	NAME PLATE RETAINER FOR 3x10 POLY
4	0.335 lbmass	0.671 lbmass	100008157	Combo Mat Fiber Reinforcing 24 Oz

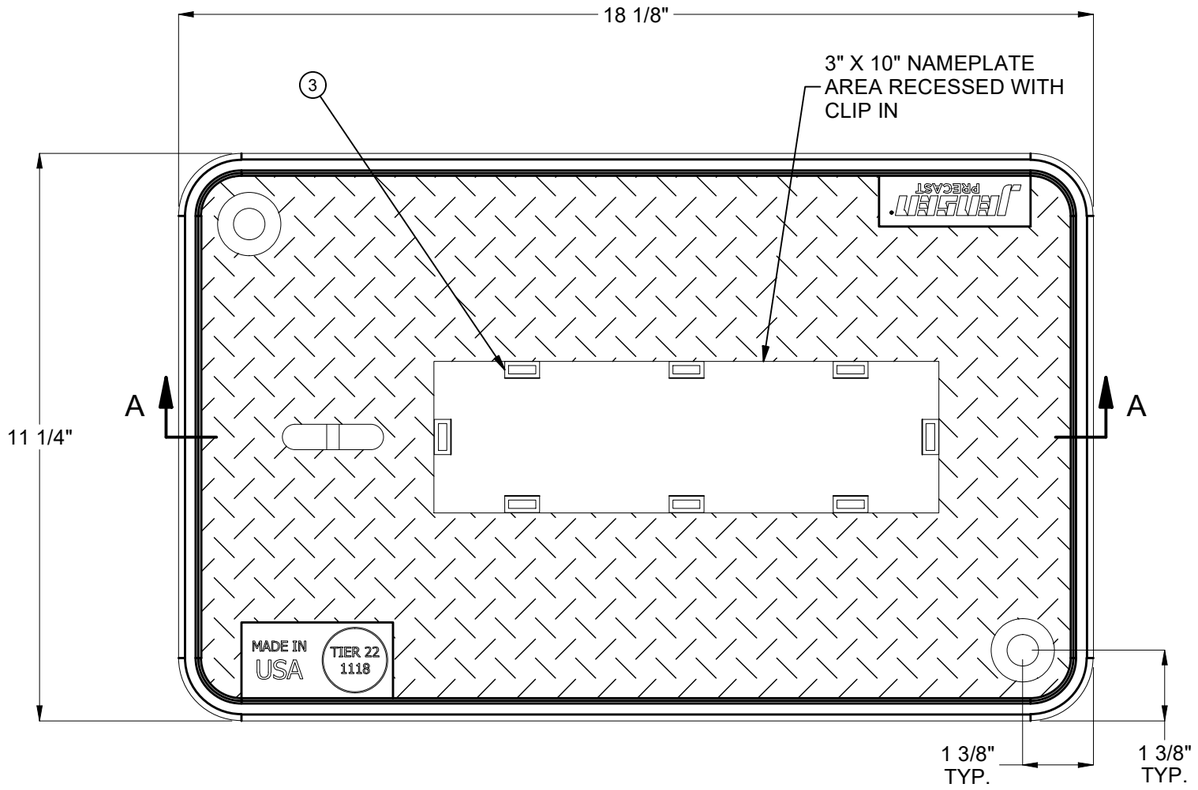

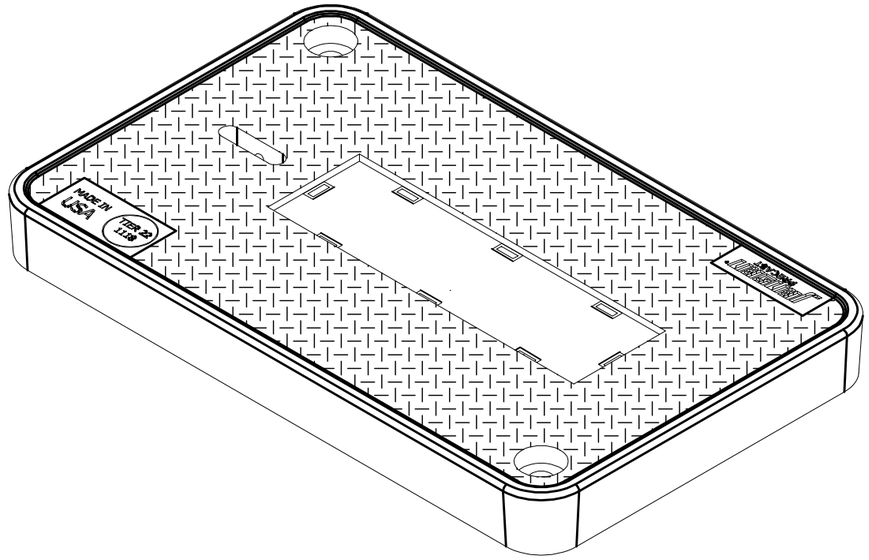

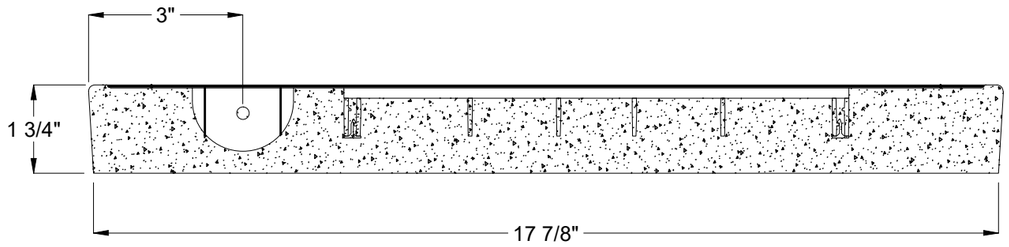

SECTION A-A

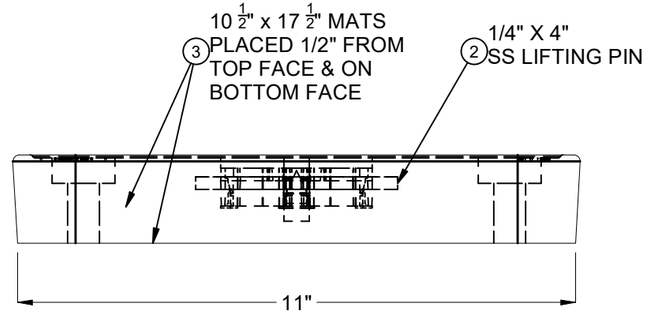

END VIEW

REVISION HISTORY			
REV	DESCRIPTION	DATE	BY
A	INITIAL RELEASE	12/7/2022	

DESIGN SPEC: ANSI/SCTE-77	APPROX. WEIGHT: 23.37 lbs		
AGENCY:	DESIGN/TEST LOAD: 22.5/33.75 kip		
AGENCY SPEC:	LOADING SPEC: Tier-22		

JENSEN PRECAST EST. 1968

©2024 Jensen Precast- All rights reserved.
Unless expressly authorized by Jensen Precast any use or duplication is strictly prohibited under penalty of civil action or codes.

DESCRIPTION: HPC 1118 Polymer Cover, Tier-22, Bolt Down, Nameplate			REV: A-3
PART #: 200065087		DRAWN BY: M. Baumann	SHEET: 1 OF 1
CREATED: 2/19/2019		MODIFIED: 7/8/2024	

200065087.idw