DESIGN NOTES
■ FOR COMPLETE DESIGN AND PRODUCT INFORMATION CONTACT JENSEN PRECAST.

BILL OF MATERIALS

ITEM	UNIT QTY	QTY	PART NUMBER	DESCRIPTION
4	1	1	100001312	Vault 4878x60 Rect. Bottom Section Core Drill Sump TMWA 557 Ext. Coating - BG2000 Waterproofing Multicoat
1	1	1	100008794	CAS2-4878-AH4-DP-G-IN-LL-SP-TMWA-OH06
2	1	1	100005644	LADDER HOOKED 5FT-2IN GALV I3600
3	1	1	100005651	LADDER UP SAFETY POST LU-1

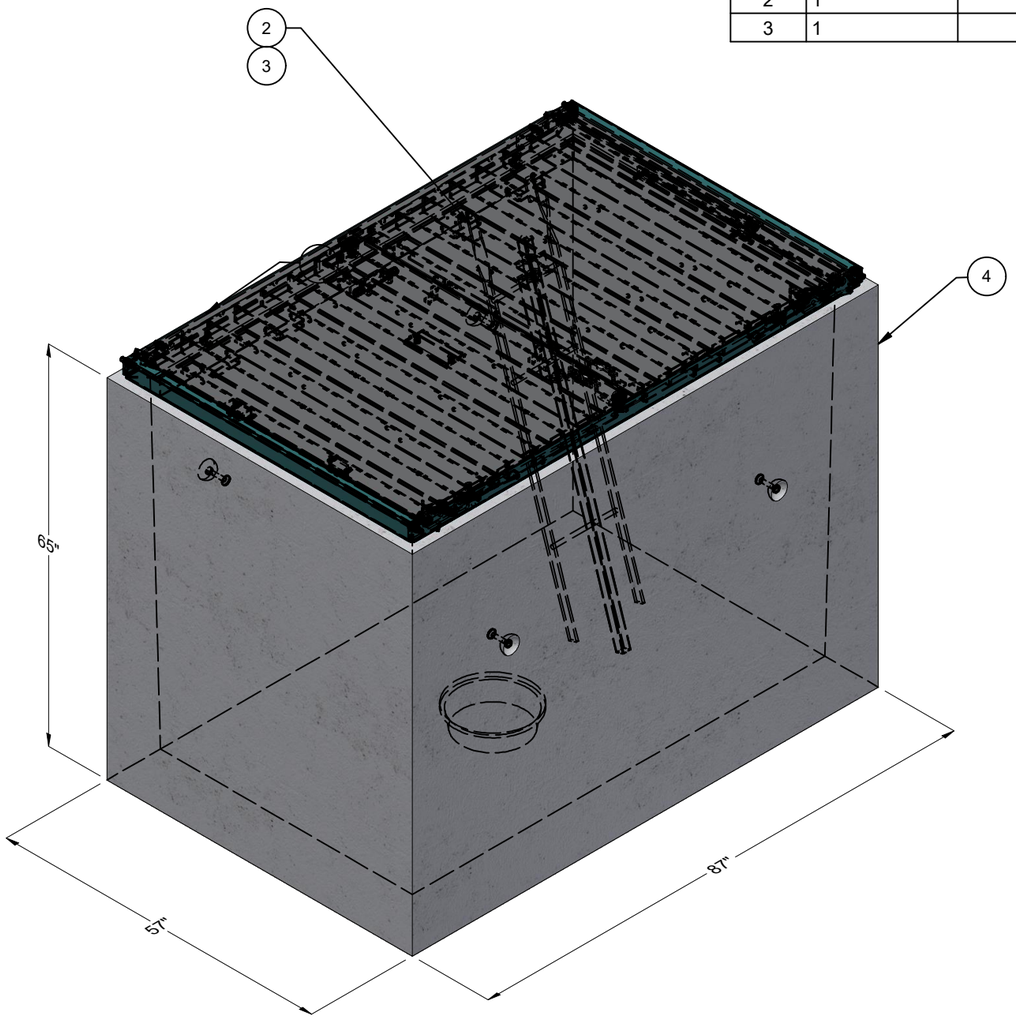

ISOMETRIC VIEW

CHANGE HISTORY			
NO.	DESCRIPTION	DATE	BY
1	2204-52667	5-12-22	DCH

BURY DEPTH:	0.0' - 3.0' to Top		
WATER LEVEL:	Below Structure	WEIGHT:	9280.1 Lbs
DESIGN SPEC:	ASTM C857,ACI 318	LOADING SPEC:	A-16 (AASHTO HS20-44)
AGENCY:	IVGID	AGENCY SPEC:	

JENSEN PRECAST EST. 1968

WWW.JENSENPRECAST.COM

©2018 Jensen Precast- All rights reserved.
All materials appearing as Jensen Precast documents and the like are proprietary work product and are protected under U.S. copyright and other laws.
Unless in conjunction with business conducted with Jensen Precast, any use of Jensen Precast work product without express, written consent is prohibited, and recipient is prohibited from distributing any and all work product to non-approved third parties under penalty of civil action.

DESCRIPTION:	Utility Vault 4878 Layout Assembly IVGID 52667 LAYOUT REVIEW		REV: A-3
PART NUMBER:	200064570	DRAWN BY:	MLR
CREATED:	12/31/2018	MODIFIED:	5/16/2022
			SHEET: 1 OF 2

200064570.idw

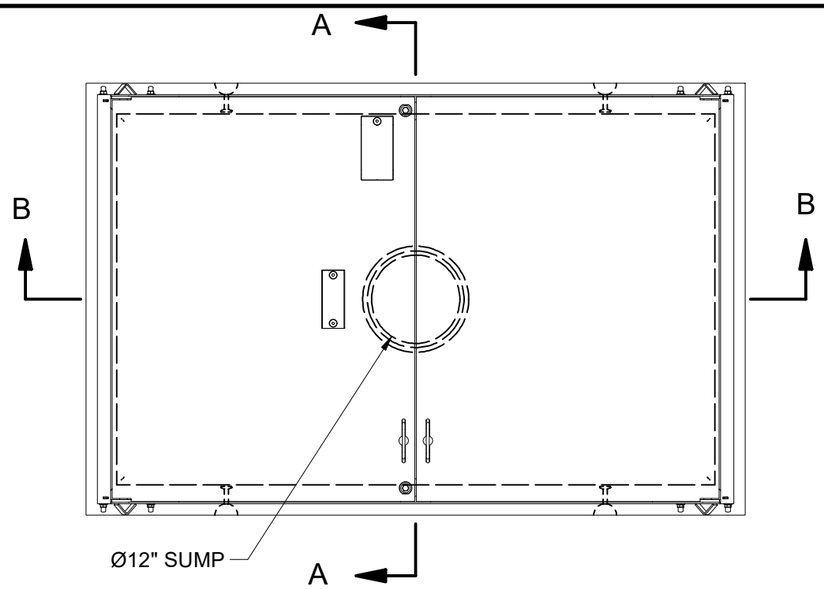

PLAN VIEW

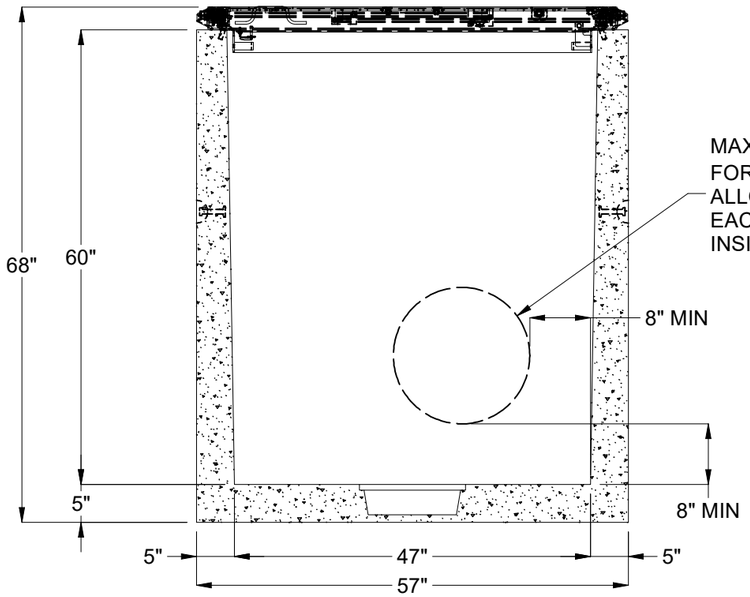

SECTION A-A

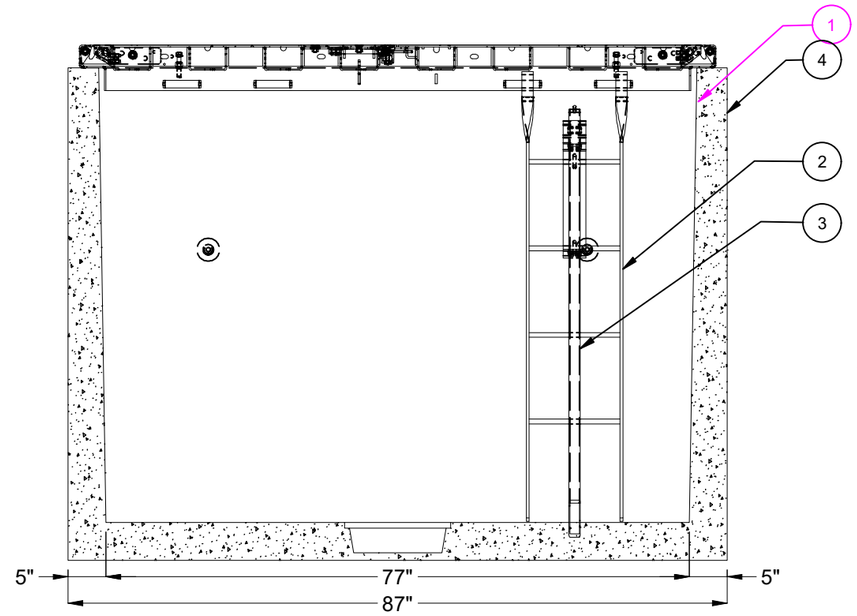

A LADDER UP IS TOO LONG
TO MOUNT ON THIS LADDER

SECTION B-B

BURY DEPTH:	0.0' - 3.0' to Top		
WATER LEVEL:	Below Structure	WEIGHT:	9280.1 Lbs
DESIGN SPEC:	ASTM C857,ACI 318	LOADING SPEC:	A-16 (AASHTO HS20-44)
AGENCY:	IVGID	AGENCY SPEC:	

JENSEN PRECAST EST. 1968

WWW.JENSENPRECAST.COM

©2018 Jensen Precast- All rights reserved.
All materials appearing as Jensen Precast documents and the like are proprietary work product and are protected under U.S. copyright and other laws.
Unless in conjunction with business conducted with Jensen Precast, any use of Jensen Precast work product without express, written consent is prohibited, and recipient is prohibited from distributing any and all work product to non-approved third parties under penalty of civil action.

DESCRIPTION:	Utility Vault 4878 Layout Assembly IVGID 52667 LAYOUT DRAWING		REV: A-3
PART NUMBER:	200064570	DRAWN BY:	MLR
CREATED:	12/31/2018	MODIFIED:	5/16/2022
			SHEET: 2 OF 2

200064570.idw