NOTES
■ FOR COMPLETE DESIGN AND PRODUCT INFORMATION CONTACT JENSEN PRECAST.

BILL OF MATERIALS

ITEM	UNIT QTY	QTY	PART NUMBER	DESCRIPTION
1	15.714 ft^3	15.714 ft^3	100011425	CONCRETE MIX GENERIC 5000 PSI
2	1	1	100040306	COVER 44108 ALUM THT 1000169597 USF-HATCH
3	1	4	100004880	ANCHOR UTILITY .671DIA 5.625-SLAB GALV P75 6UA671
4	1	1	300150196	REINFORCING MAT 300150196

200064338.idw

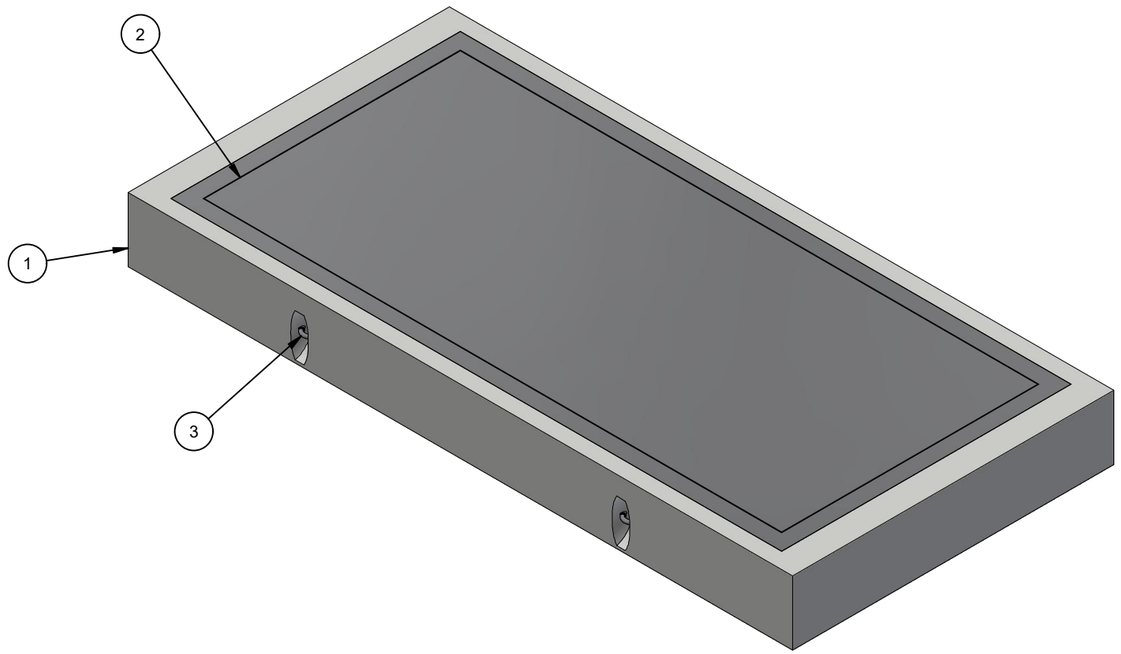

ISO VIEW

LIFTING NOTES
■ THIS CONCRETE PRODUCT IS DESIGNED TO BE LIFTED AT 2500 PSI WITH 4 LIFT CONNECTIONS EQUALLY LOADED TO 4 LIFTING POINTS AT A MINIMUM 90° SLING ANGLE, MEASURED FROM HORIZONTAL.

BURY DEPTH:	0.0' - 0.0' to Top		
WATER LEVEL:	Below Structure	APPROX. WEIGHT:	4366.26 Lbs
DESIGN SPEC:	ASTM C890,ACI 318	LOADING SPEC:	A-16 (AASHTO HS20-44)
REINFORCEMENT TYPE:	Rebar	LIFTING TYPE:	A-Anchor

JENSEN PRECAST EST. 1968

WWW.JENSENPRECAST.COM

©2022 Jensen Precast- All rights reserved.
All materials appearing as Jensen Precast documents and the like are proprietary work product and are protected under U.S. copyright and other laws.
Unless in conjunction with business conducted with Jensen Precast, any use of Jensen Precast work product without express, written consent is prohibited, and recipient is prohibited from distributing any and all work product to non-approved third parties under penalty of civil action.

CHANGE HISTORY

NO.	DESCRIPTION	DATE	BY
1	INITIAL RELEASE	5/09/2022	JW

DESCRIPTION: Vault 44108 x 12 Slab Top 44"x108"C Cast-In Cover

CASTING LAYOUT

REV: A-1

SHEET: 1 OF 2

PART NUMBER:	200064338	DRAWN BY:	J. Warren
CREATED:	5/5/2022	MODIFIED:	5/9/2022

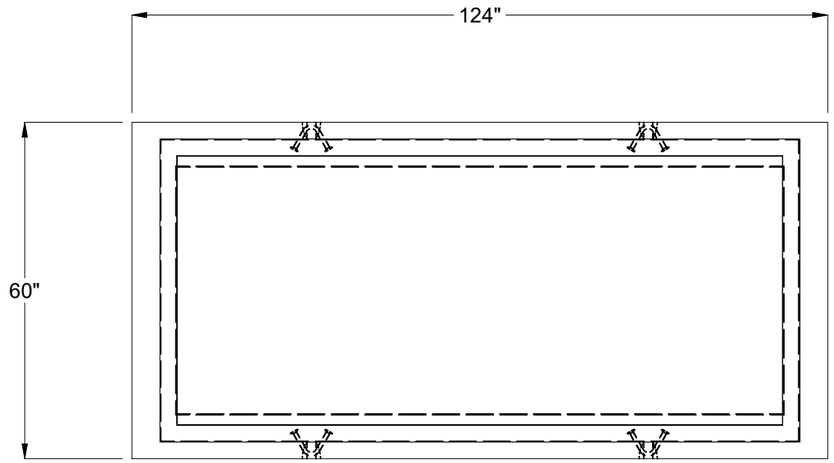

PLAN VIEW

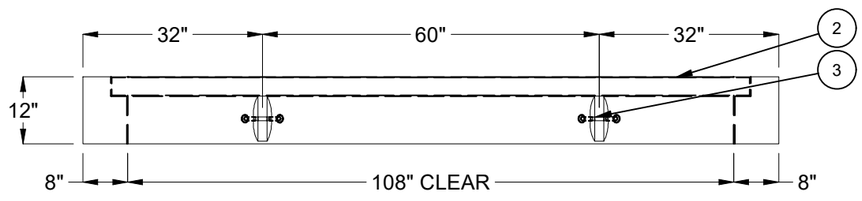

SIDE PROFILE VIEW



END PROFILE VIEW

BURY DEPTH:	0.0' - 0.0' to Top		
WATER LEVEL:	Below Structure	APPROX. WEIGHT:	4366.26 Lbs
DESIGN SPEC:	ASTM C890,ACI 318	LOADING SPEC:	A-16 (AASHTO HS20-44)
REINFORCEMENT TYPE:	Rebar	LIFTING TYPE:	A-Anchor

JENSEN PRECAST EST. 1968

WWW.JENSENPRECAST.COM

©2022 Jensen Precast- All rights reserved.
All materials appearing as Jensen Precast documents and the like are proprietary work product and are protected under U.S. copyright and other laws.
Unless in conjunction with business conducted with Jensen Precast, any use of Jensen Precast work product without express, written consent is prohibited, and recipient is prohibited from distributing any and all work product to non-approved third parties under penalty of civil action.

DESCRIPTION:	Vault 44108 x 12 Slab Top 44"x108"C Cast-In Cover CASTING DRAWING		REV: A-1
PART NUMBER:	200064338	DRAWN BY:	J. Warren
CREATED:	5/5/2022	MODIFIED:	5/9/2022
			SHEET: 2 OF 2

200064338.idw