NOTES
■ ALL PARTS TO BE STENCILED: MFG DATE / JOB NUMBER / PRODUCT ID / WEIGHT.

SECOND POUR (ANTI-FLOTATION)

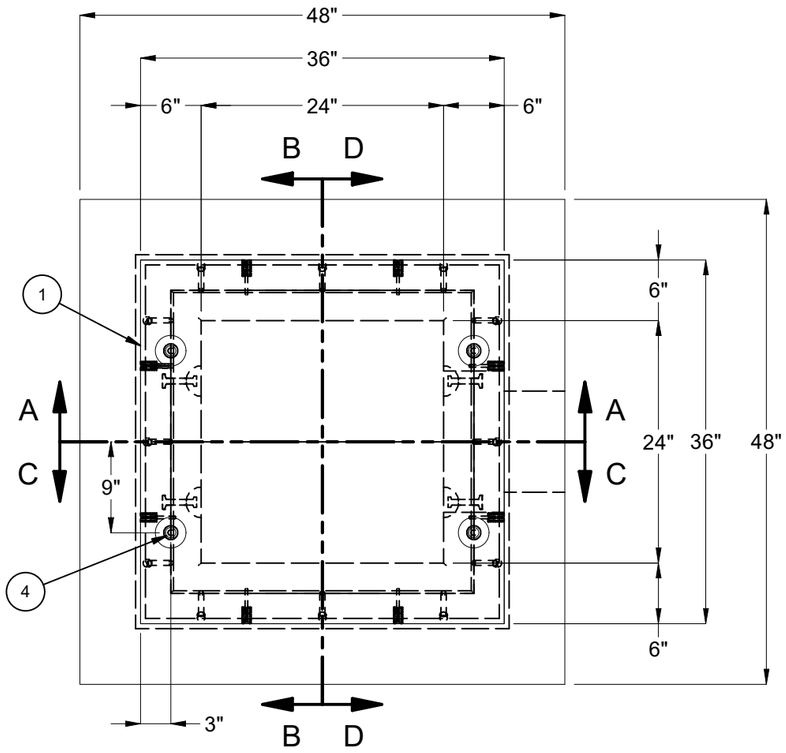

PLAN VIEW

BILL OF MATERIALS

ITEM	UNIT QTY	QTY	PART NUMBER	DESCRIPTION
1	*Varies*	21.794 ft^3	100024079	CONCRETE #19 MOD SCC
2	1	1	100040390	GRATE FRAME 2424 STEEL GALV CAST-IN 19-W-4 GRATING PACIFIC
3	1	4	100002867	ANCHOR DOGBONE P52 2T X 3-3/8" GALV
4	1	4	100002870	ANCHOR DOGBONE P52 2T X 6-3/4" GALV
5	0.120 ul	0.120 ul	100005744	SEALANT EXPANSION MASTIC WATERSTOP SLAB CS-231 3/4 X 1
6	1	8	100028748	INSERT THREADED FERRULE LOOP 5/8 X 3-1/2 PLATED F42
7	1	8	100033435	REBAR #4 DOWEL-IN D101 STRAIGHT ASTM A615 GR60 MALE 12IN
8	45.000 in	180.000 in	100003075	REINF #4 REBAR ASTM A706/A615 GR60
9	1	1	300150191	REINFORCING MAT 300150191

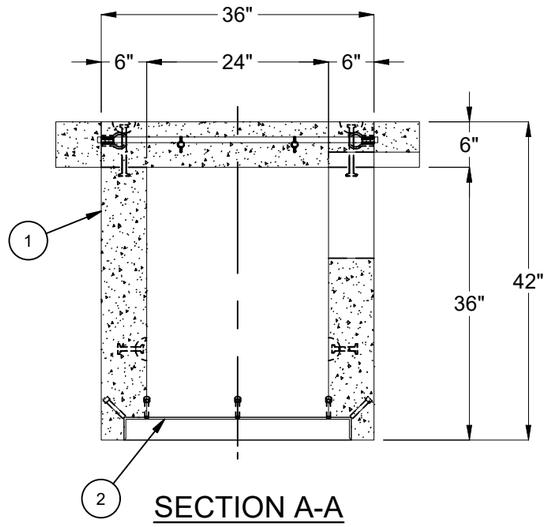

SECTION A-A

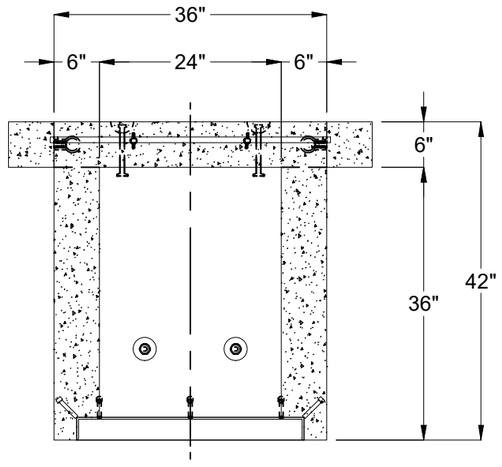

SECTION B-B

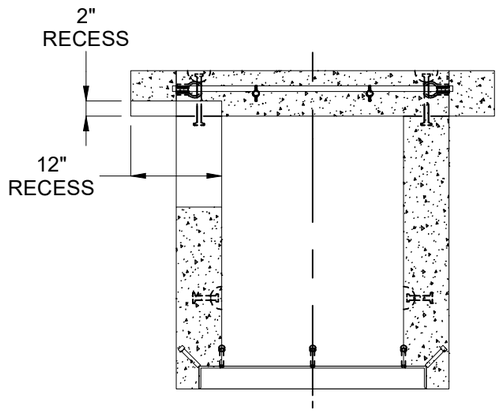

SECTION C-C

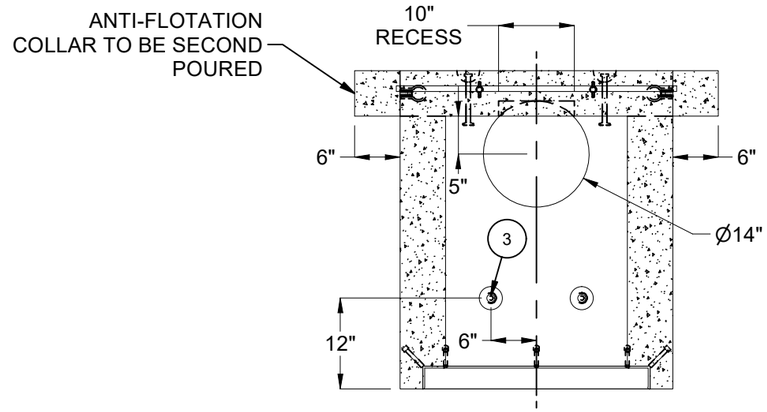

SECTION D-D

LIFTING NOTES
■ DEMOLDING: THIS CONCRETE PRODUCT IS DESIGNED TO BE LIFTED AT 2,500PSI WITH 4 LIFT CONNECTIONS EQUALLY LOADED TO 4 LIFTING POINTS AT A MINIMUM 90° SLING ANGLE, MEASURED FROM HORIZONTAL.
■ INSTALLATION: THIS CONCRETE PRODUCT IS DESIGNED TO BE LIFTED AT 5,500 PSI WITH 4 LIFT CONNECTIONS EQUALLY LOADED TO 4 LIFTING POINTS AT A MINIMUM 60° SLING ANGLE, MEASURED FROM HORIZONTAL.

BURY DEPTH:	0.0' - 0.0' to Top		
WATER LEVEL:	3.0'	APPROX. WEIGHT:	3364.77 Lbs
DESIGN SPEC:	ASTM C857,ACI 318	LOADING SPEC:	A-16 (AASHTO HS20-44)
REINFORCEMENT TYPE:	Rebar	LIFTING TYPE:	Dogbone

JENSEN PRECAST EST. 1968

WWW.JENSENPRECAST.COM

©2022 Jensen Precast- All rights reserved.
All materials appearing as Jensen Precast documents and the like are proprietary work product and are protected under U.S. copyright and other laws.
Unless in conjunction with business conducted with Jensen Precast, any use of Jensen Precast work product without express, written consent is prohibited, and recipient is prohibited from distributing any and all work product to non-approved third parties under penalty of civil action.

REVISION HISTORY			
REV	DESCRIPTION	DATE	APPROVED
A-3	INITIAL RELEASE	6/9/2022	

DESCRIPTION:	Vault 2424x36 Rect. Bottom Section Cast-In Frame CASTING LAYOUT		REV: A-3
PART NUMBER:	200064223	DRAWN BY:	J. Prado
CREATED:	12/14/2021	MODIFIED:	6/9/2022
			SHEET: 1 OF 1

200064223.idw