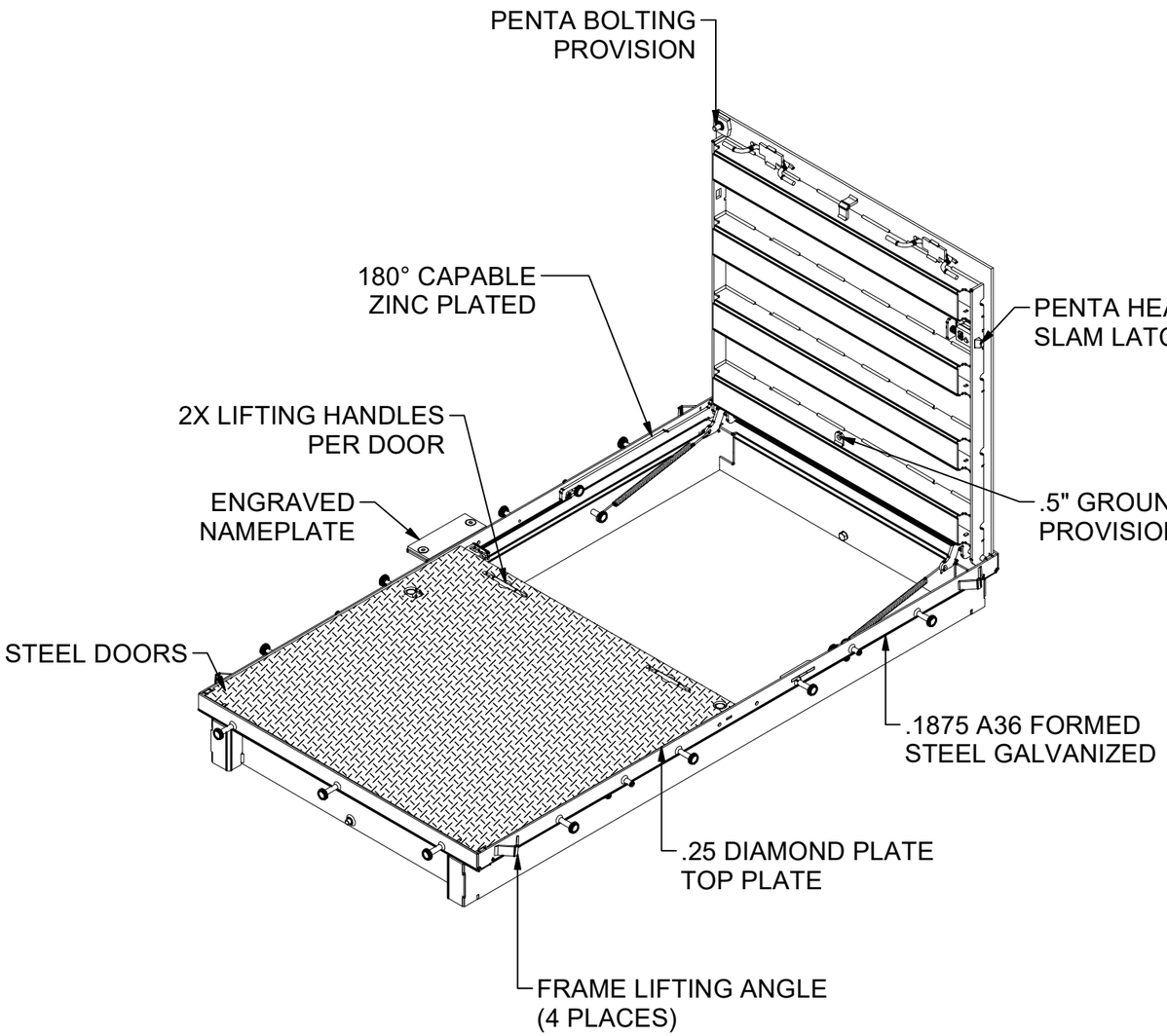

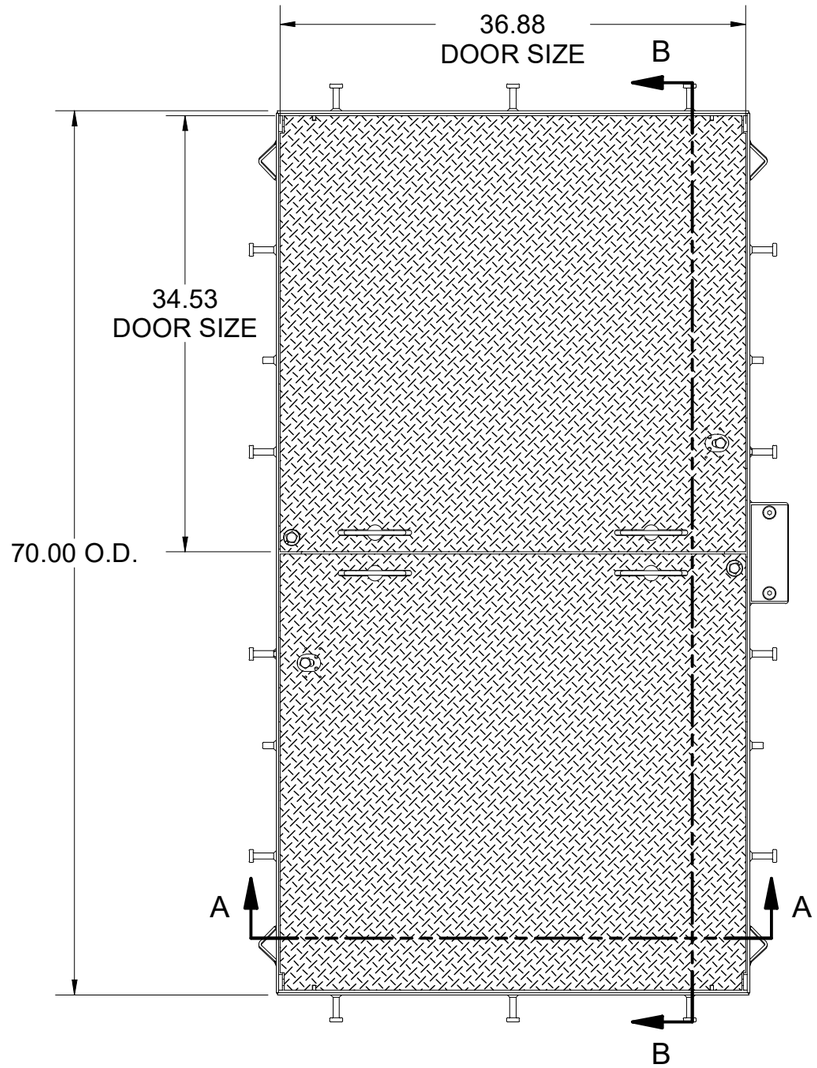

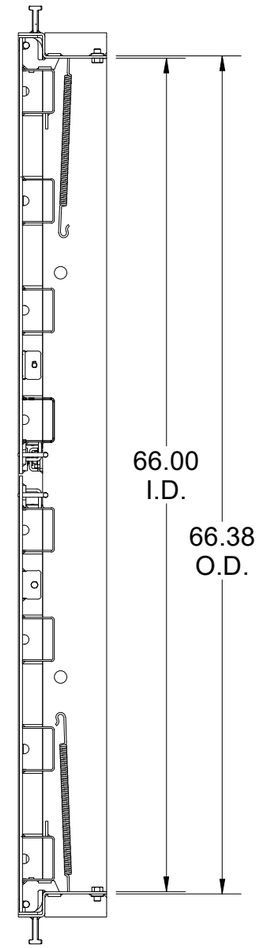

SECTION B-B

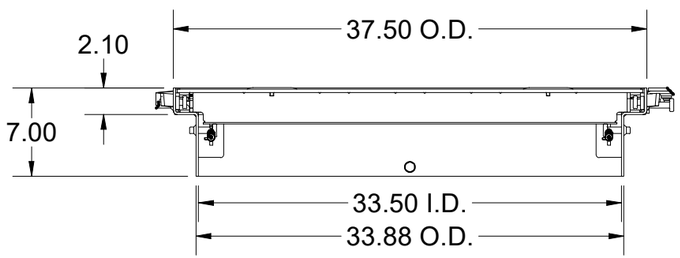

SECTION A-A

LOADING CRITERIA: ASTM C1802 Load Level 04

16,000 lb load on 10" x 20" footprint, without impact restricted to parking spaces and areas within close proximity of roadways.

SURFACE:	Diamond Plate	FINISH:	Galvanized
WEIGHT:	413.85 lbs	MARKING:	As Noted

Infrastructure JENSEN
527 Dunn Circle, Sparks, NV 89431
775-352-2716 FAX: 755-358-8127
JENSENMETALTECH.COM

©2026 Jensen Infrastructure - All rights reserved. All materials appearing as Jensen Infrastructure documents and the like are proprietary work product and are protected under U.S. copyright and other laws. Unless in conjunction with business conducted with Jensen Infrastructure , any use of Jensen Infrastructure work product without express, written consent is prohibited, and recipient is prohibited from distributing any and all work product to non-approved third parties under penalty of civil action. This product shall only be produced in a Jensen Infrastructure facility.

DESCRIPTION:	CAS2-3366-CH4-DP-G-BD-SL-GR-PNW-OH07 33x66 Standard Cover Assembly (Loading Criteria Per ASTM C1802 Load Level 04, Steel, Hinged, Handle (2 Per Door), Diamond Plate, Galvanized, Slam Latch, PNW) 07	REV:	I-1-2
PART NUMBER:	200063368	DRAWN BY:	D. Parlee
CREATED:	4/27/2022	MODIFIED:	3/6/2026
		SHEET:	1

200063368.idw

BILL OF MATERIALS

ITEM	ITEM QTY	QTY	PART NUMBER	DESCRIPTION	PART NAME
1	2	2	200063369	DAS2-T-3366-HF4-DP-R-CL-SL-GR-PNW	200063369
2	1	1	200100310	FAS-3366-CHF-R-SL-GR-PNW-OH07	200100310
3	4	4	100040068	CUSTOM EXTENSION SPRING:50LB-IN,15.352 IN LNG, .70 OD, .148 WIRE DIA	100040068
4	2	2	100007866	Round Push Nut, Steel, for 1/2" Screw Size	100007866
5	2	2	200084519	1/2" THK Cam Latch 304SS	200084519
6	2	2	100004449	BOLT PENTA 1/2-13 UNC 0.875 HEAD 1L SS	100004449
7	2	2	100026256	LOW-STRENGTH STEEL FLANGE NUT, 1/2" - 13 THREAD SIZE	100026256
8	2	2	100007915	SPRING COMPRESSION 055 X 5/8 X 7/8 LONG	100007915
9	2	2	100007862	HEX NUT NYLOCK - 5/16-18 UNC - 304SS	100007862
10	2	2	100004450	BOLT PENTA 1/2-13 UNC 0.875 HEAD 1.25L SS	100004450
11	2	2	100007885	RIVET, .1875, 120 DEG CSK, SST, HANSON PTTK608	100007885
12	2	2	100007733	Bolt Socket Flat Countersunk Head - 1/2-13 UNC - Grade 5 - Zinc - FT - 1"	100007872
13	2	2	100003484	Hex Bolt 1/2-13 UNC ZINC - FT - 0.75"	100003484
14	2	2	100004002	Hex Bolt 5/16-18 UNC 316SS - PT - 2"	100004002
15	1	1	100007391	NAME PLATE STEEL - BLANK	100007391
16	2	2	200075096	PNW HINGE SPRING MOUNT, 2 DOOR FRAME, LEFT	200075096
17	2	2	200075099	PNW HINGE SPRING MOUNT, 2 DOOR FRAME, RIGHT	200075099

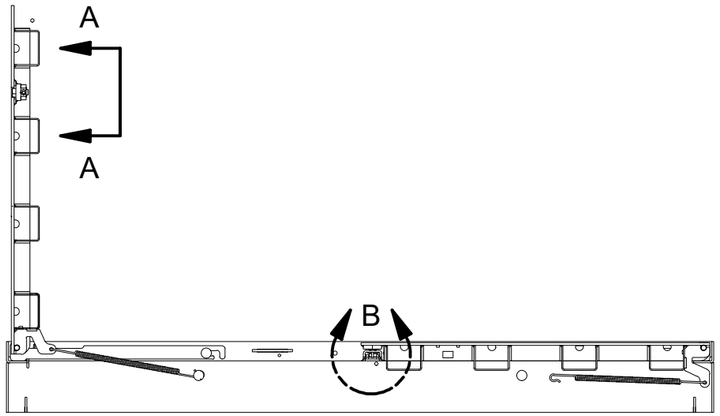

SECTION L-L
SCALE 1 / 15

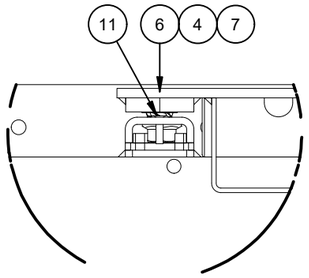

DETAIL B
SCALE 1:4

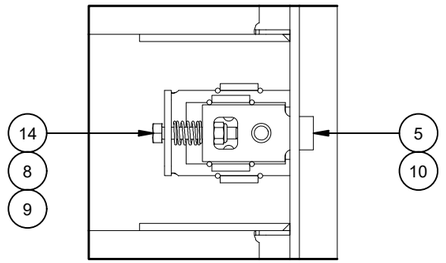

SECTION A-A
SCALE 1/4

REVISION HISTORY		
DESCRIPTION	DATE	REVISED BY
CHANGED SPRING MOUNT & FRAME TO CLEAR CHANNEL, NEW NEST, NO PS	6/5/23	
CHANGED TOP PLATE TO DIAMOND PLATE; CHANGED BOLTDOWN BOLTS AND LIFTING ANGLES TO STANDARD	6/14/2023	
MOVED SPRING MOUNT ON DOOR AND FRAME TO INCREASE SPRING CLEARANCE TO FRAME, NEW NEST, NEW PS	11/27/23	
NEW NEST, NEW BOM, NEW DESIGN, RERAN ALL CALCS, UPDATED LIFTING, ADDED ALL STANDARD FEATURES FOR PNW ERM 56285-8	8/21/24	
UPDATED 200088390 TO FUNCTION BETTER	1/31/2025	
ADDED 1/32" TO FRAME HEIGHT AND CHANGED TO LOWER TENSION SPRING	3/5/2025	
UPDATED FRAME STYLE TO IMPROVE MANUFACTURING	4/25/2025	
CORRECTED BEND DIRECTION NOTES FOR FRAME SIDE	5/8/2025	
57473-9: CHANGED BENT CHANNEL V OPENING TO 2 INCH. UPDATED BEND TABLE ACCORDINGLY.	7/08/2025	C. HEYWOOD
60096-1: GOT RID OF HINGES IN DRAWING AS THEY ARE BEING MADE LIBRARY PARTS	1/9/2026	C. HEYWOOD
60391-1: UPDATED FRAME SIDE AND END V-OPENING TO 1.5".	2/23/2026	C. HEYWOOD

MATERIAL FINISH: Galvanized

MATERIAL SURFACE: Diamond Plate

Infrastructure
JENSEN

527 Dunn Circle, Sparks, NV 89431
775-352-2716 FAX: 755-358-8127
JENSENMETALTECH.COM

©2026 Jensen Infrastructure - All rights reserved.
All materials appearing as Jensen Infrastructure documents and the like are proprietary work product and are protected under U.S. copyright and other laws. Unless in conjunction with business conducted with Jensen Infrastructure , any use of Jensen Infrastructure work product without express, written consent is prohibited, and recipient is prohibited from distributing any and all work product to non-approved third parties under penalty of civil action.
This product shall only be produced in a Jensen Infrastructure facility.

PART NUMBER & DESCRIPTION: 200063368
CAS2-3366-CH4-DP-G-BD-SL-GR-PNW-OH07

REV: I-1-2

WEIGHT: 413.85 Lbs

DRAWN BY: D. Parlee

SHEET: 2

CREATED: 4/27/2022

MODIFIED: 3/6/2026

200063368.idw

BURN LIST - BOM

PART NAME	ITEM QTY	QTY	DESCRIPTION	STOCK NUMBER	MATERIAL	MASS	SHEET
200063372	8	73.210 lbmass	Door Component Steel Channel	100007840	SHT STL GR80 GA-11 SM-HR RAW .1196	9.151 lbmass	06
200063374	4	13.580 lbmass	Door Component Steel Side Bar	100007735	STL ASTM A36 SM-HRPO RAW .250	3.395 lbmass	07
200063378	2	197.418 lbmass	Door Component Steel Plate, Top	100007736	SHT STL CQ DP RAW .25 - 36 KSI YIELD	98.709 lbmass	08
200074853	2	0.102 lbmass	Grounding Tab	100007734	STL ASTM A36 SM-HRPO 60X120 RAW .1875	0.051 lbmass	09
200074943	4	1.822 lbmass	PNW Formed Member Hinge	100007735	STL ASTM A36 SM-HRPO RAW .250	0.455 lbmass	10
200087678	1	1.857 lbmass	NAME PLATE FRAME ANGLE (FOR 2" FRAMES)	100007734	STL ASTM A36 SM-HRPO 60X120 RAW .1875	1.857 lbmass	11
200088390	2	0.757 lbmass	Slam Latch Retainer	100007734	STL ASTM A36 SM-HRPO 60X120 RAW .1875	0.378 lbmass	12
200088398	2	0.554 lbmass	FLANGE NUT BRACKET	100007734	STL ASTM A36 SM-HRPO 60X120 RAW .1875	0.277 lbmass	13
200088400	2	0.161 lbmass	FLANGE NUT RETAINER	100007734	STL ASTM A36 SM-HRPO 60X120 RAW .1875	0.080 lbmass	14
200088401	2	0.186 lbmass	FLANGE NUT SHIM PLATE	100007735	STL ASTM A36 SM-HRPO RAW .250	0.093 lbmass	15
200092276	2	0.617 lbmass	Frame Component Steel Slam Latch Catch	100007735	STL ASTM A36 SM-HRPO RAW .250	0.309 lbmass	16
200100311	2	62.836 lbmass	Frame Component Steel Frame Side, Cast In	100007734	STL ASTM A36 SM-HRPO 60X120 RAW .1875	31.418 lbmass	17
200100312	2	30.777 lbmass	Frame Component Steel Frame End, Cast In	100007734	STL ASTM A36 SM-HRPO 60X120 RAW .1875	15.389 lbmass	18
200100313	4	3.959 lbmass	Frame Component Steel Skirt Pocket Angle	100007734	STL ASTM A36 SM-HRPO 60X120 RAW .1875	0.990 lbmass	19

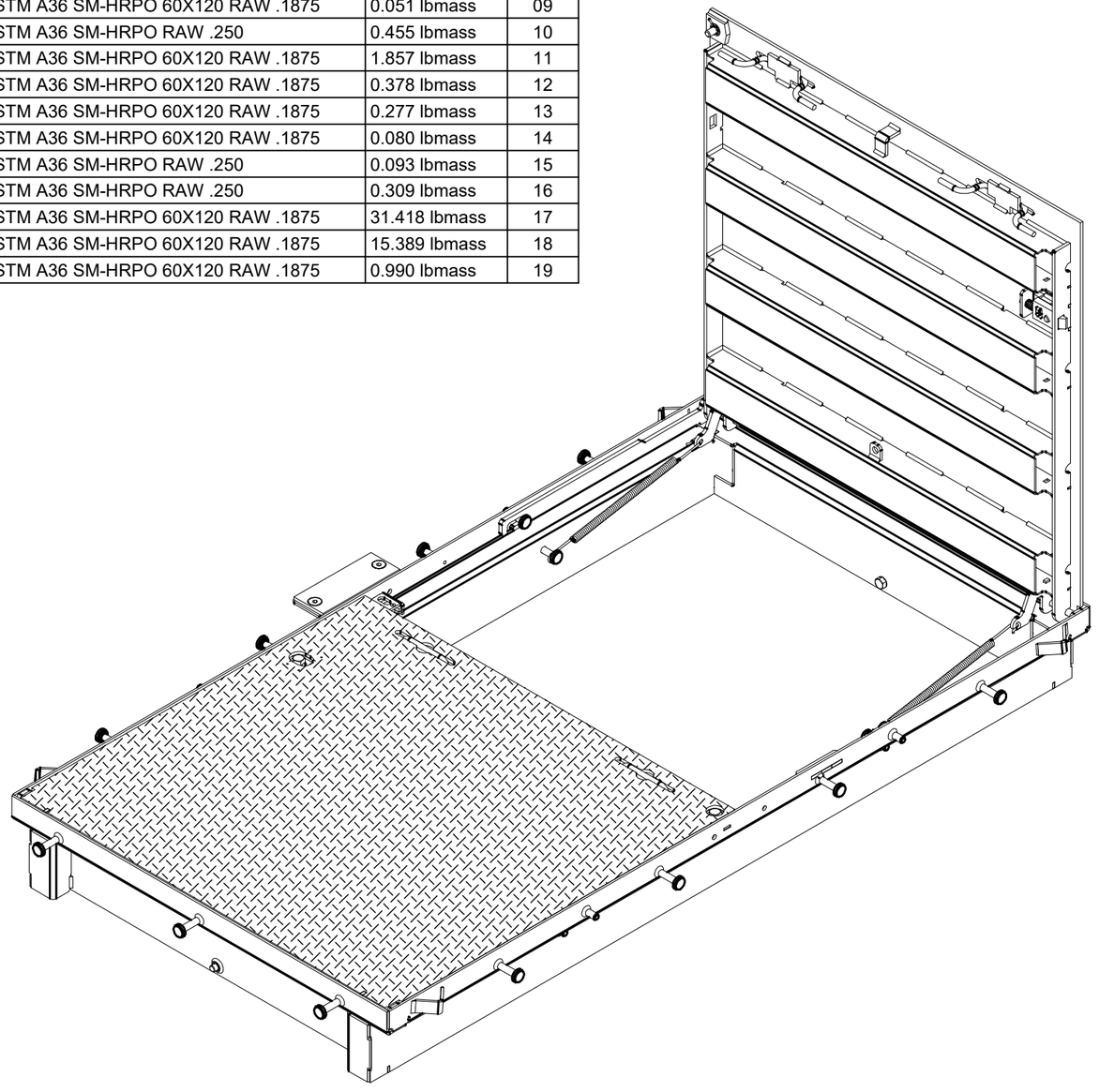

200063368.idw

MATERIAL FINISH: Galvanized

MATERIAL SURFACE: Diamond Plate

Infrastructure JENSEN
527 Dunn Circle, Sparks, NV 89431
775-352-2716 FAX: 755-358-8127
JENSENMETALTECH.COM

©2026 Jensen Infrastructure - All rights reserved.
All materials appearing as Jensen Infrastructure documents and the like are proprietary work product and are protected under U.S. copyright and other laws. Unless in conjunction with business conducted with Jensen Infrastructure , any use of Jensen Infrastructure work product without express, written consent is prohibited, and recipient is prohibited from distributing any and all work product to non-approved third parties under penalty of civil action.
This product shall only be produced in a Jensen Infrastructure facility.

PART NUMBER & DESCRIPTION: 200063368
CAS2-3366-CH4-DP-G-BD-SL-GR-PNW-OH07

REV: I-1-2

WEIGHT: 413.85 Lbs

DRAWN BY: D. Parlee

CREATED: 4/27/2022

MODIFIED: 3/6/2026

SHEET: 3

BILL OF MATERIALS

ITEM	ITEM QTY	QTY	PART NUMBER	DESCRIPTION	PART NAME
1	2	0.186 lbmass	100007735	FLANGE NUT SHIM PLATE	200088401
2	2	0.617 lbmass	100007735	Frame Component Steel Slam Latch Catch	200092276
3	2	62.836 lbmass	100007734	Frame Component Steel Frame Side, Cast In	200100311
4	2	30.777 lbmass	100007734	Frame Component Steel Frame End, Cast In	200100312
5	1	1.857 lbmass	100007734	NAME PLATE FRAME ANGLE (FOR 2" FRAMES)	200087678
6	4	3.959 lbmass	100007734	Frame Component Steel Skirt Pocket Angle	200100313
7	2	0.554 lbmass	100007734	FLANGE NUT BRACKET	200088398
8	2	0.161 lbmass	100007734	FLANGE NUT RETAINER	200088400
9	22	22	100007889	Anchor Weld Stud - H4L - 0.5" - A29/A108 - 2.125"	100007889
10	4	4	100007728	NUT SELF-CLINCH 1/2-13 S-0813-1 RAW	100007728
11	4	4	100007641	FRAME LIFTING BRACKET	100007641

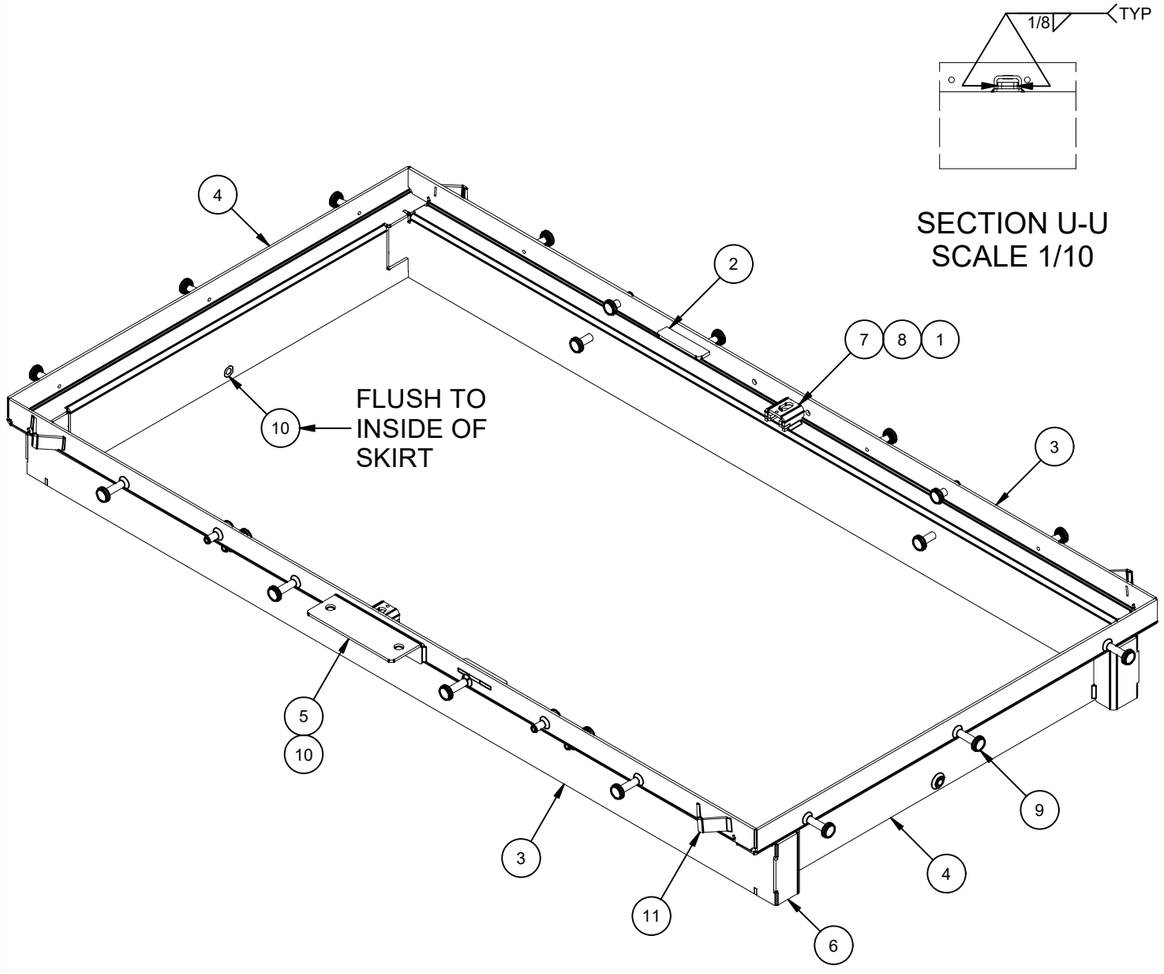

SECTION U-U
SCALE 1/10

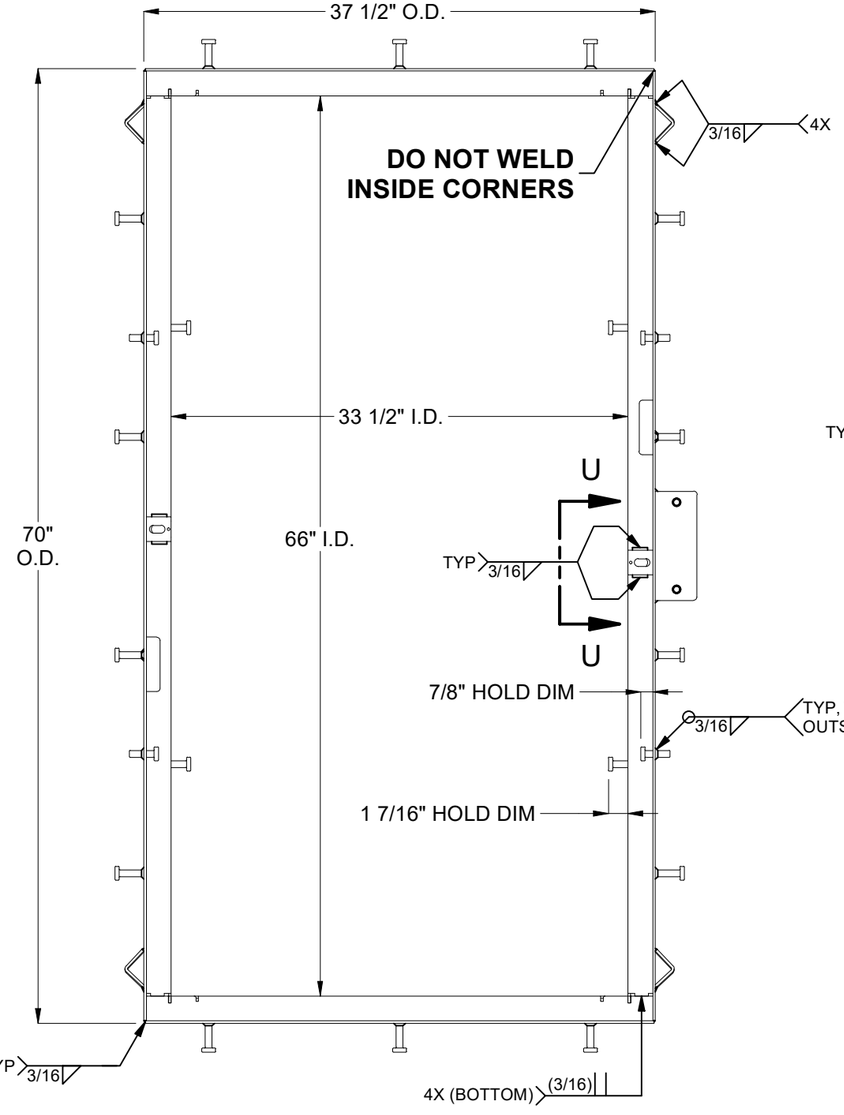

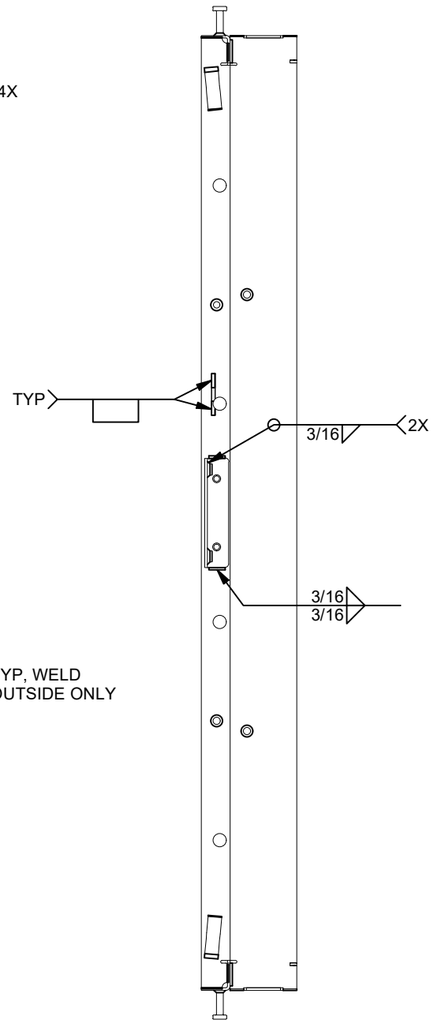

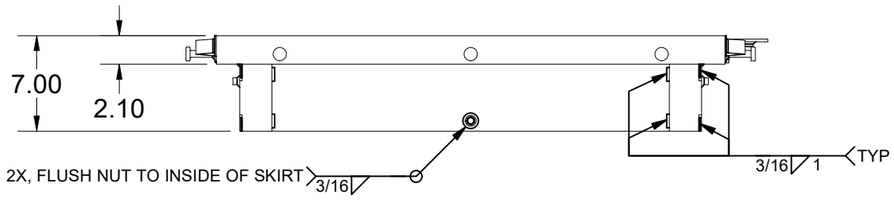

200063368.idw

MATERIAL FINISH: Raw	Infrastructure JENSEN 527 Dunn Circle, Sparks, NV 89431 775-352-2716 FAX: 755-358-8127 *JENSENMETALTECH.COM*	©2026 Jensen Infrastructure - All rights reserved. All materials appearing as Jensen Infrastructure documents and the like are proprietary work product and are protected under U.S. copyright and other laws. Unless in conjunction with business conducted with Jensen Infrastructure , any use of Jensen Infrastructure work product without express, written consent is prohibited, and recipient is prohibited from distributing any and all work product to non-approved third parties under penalty of civil action. This product shall only be produced in a Jensen Infrastructure facility.	PART NUMBER & DESCRIPTION: 200100310 FAS-3366-CHF-R-SL-GR-PNW-OH07	REV: I-1-2
MATERIAL SURFACE: Smooth			WEIGHT: 106.08 Lbs CREATED: 4/27/2022	DRAWN BY: D. Parlee MODIFIED: 3/6/2026	SHEET: 4

BILL OF MATERIALS

ITEM	UNIT QTY	QTY	PART NUMBER	DESCRIPTION	PART NAME
1	98.709 lbmass	98.709 lbmass	100007736	Door Component Steel Plate, Top	200063378
2	3.395 lbmass	6.790 lbmass	100007735	Door Component Steel Side Bar	200063374
3	9.151 lbmass	36.605 lbmass	100007840	Door Component Steel Channel	200063372
4	1	1	200095591	Slam Latch Spacer Plate - 1/2" Thick, Steel	200095591
5	0.378 lbmass	0.378 lbmass	100007734	Slam Latch Retainer	200088390
6	0.051 lbmass	0.051 lbmass	100007734	Grounding Tab	200074853
7	0.455 lbmass	0.911 lbmass	100007735	PNW Formed Member Hinge	200074943
8	1	2	100007644	LEAF PULL HANDLE A36 3/8IN DIAMETER	100007644
9	1	1	100007647	LIFTING BRACKET STEEL LEAF	100007647
10	1	2	100007646	HANDLE RETAINER STL	100007646
11	1	1	100007675	CAM BASE	100007675

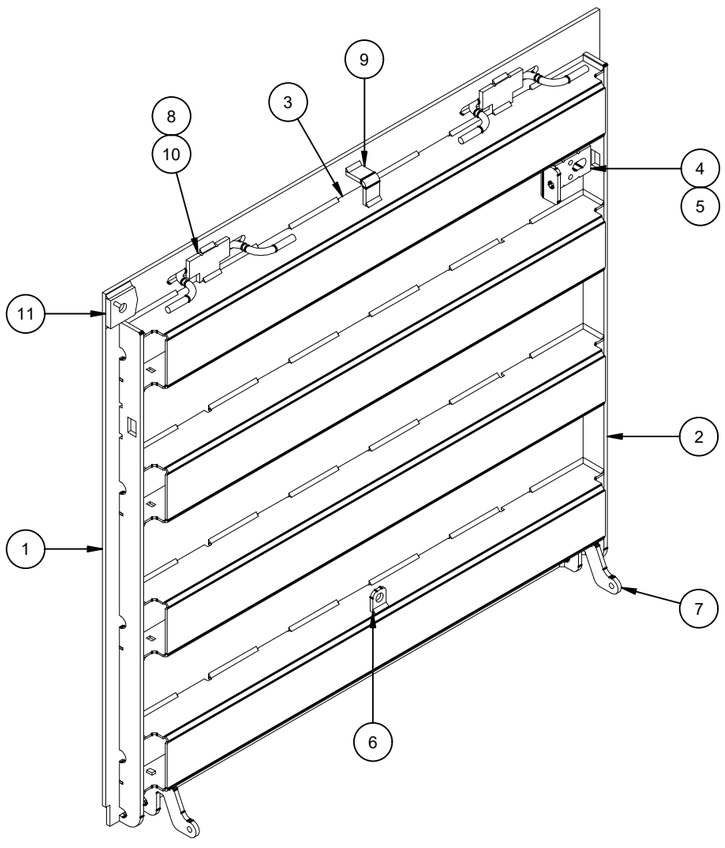

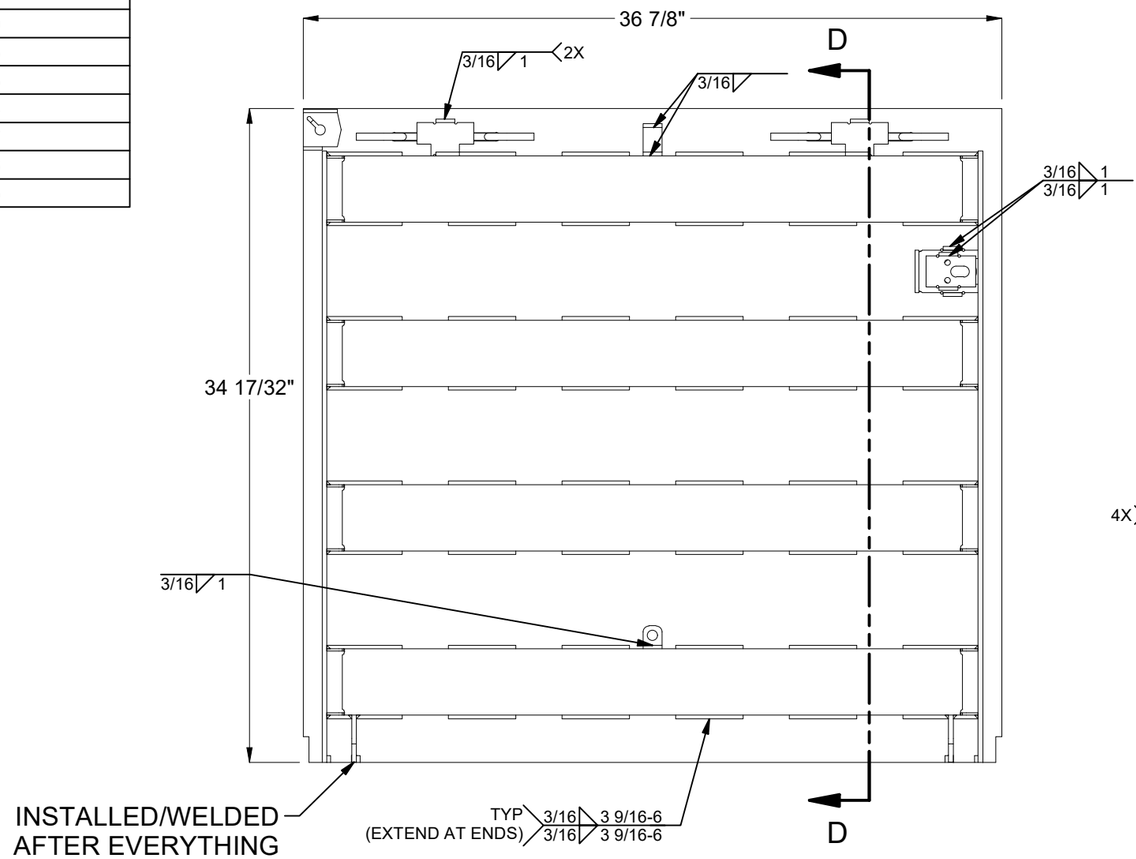

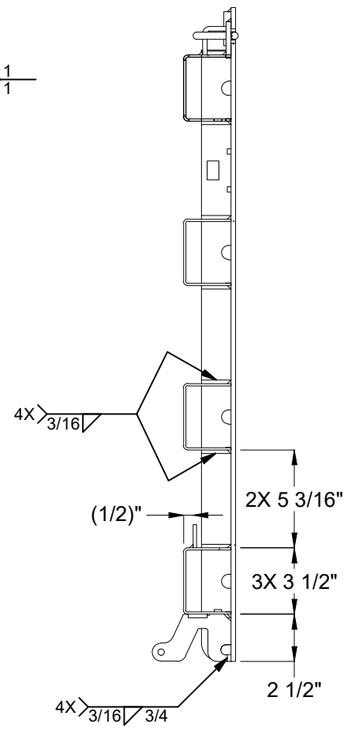

SECTION D-D

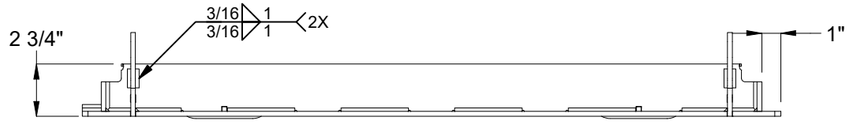

200063368.idw

MATERIAL FINISH: Raw	Infrastructure JENSEN 527 Dunn Circle, Sparks, NV 89431 775-352-2716 FAX: 755-358-8127 *JENSENMETALTECH.COM*	©2026 Jensen Infrastructure - All rights reserved. All materials appearing as Jensen Infrastructure documents and the like are proprietary work product and are protected under U.S. copyright and other laws. Unless in conjunction with business conducted with Jensen Infrastructure , any use of Jensen Infrastructure work product without express, written consent is prohibited, and recipient is prohibited from distributing any and all work product to non-approved third parties under penalty of civil action. This product shall only be produced in a Jensen Infrastructure facility.	PART NUMBER & DESCRIPTION: 200063369 DAS2-T-3366-HF4-DP-R-CL-SL-GR-PNW
MATERIAL SURFACE: Diamond Plate			WEIGHT: 146.23 Lbs DRAWN BY: D. Parlee CREATED: 4/27/2022 MODIFIED: 3/6/2026

REV: I-1-2

SHEET: 5

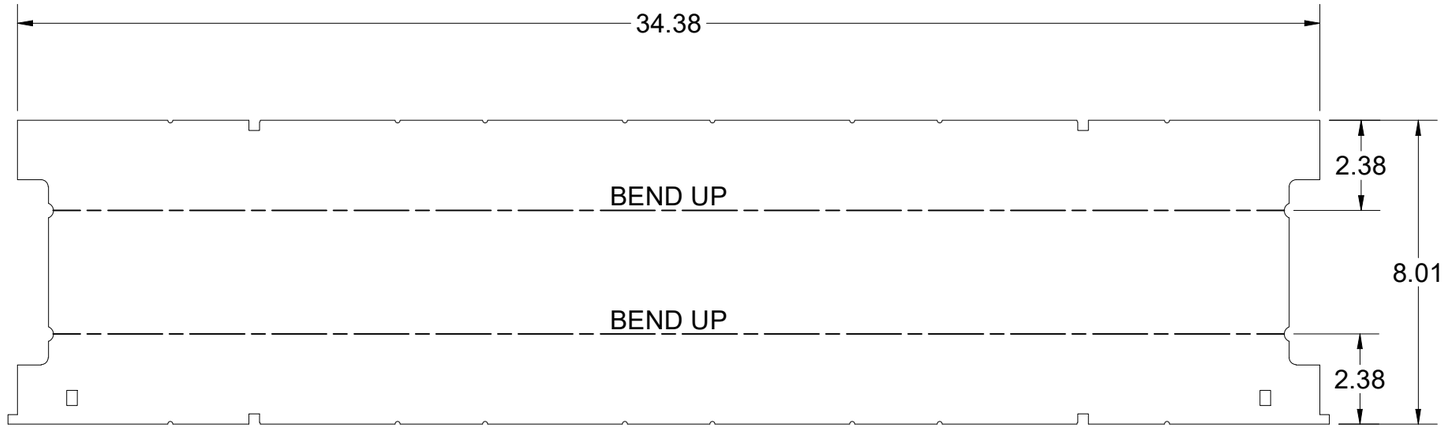

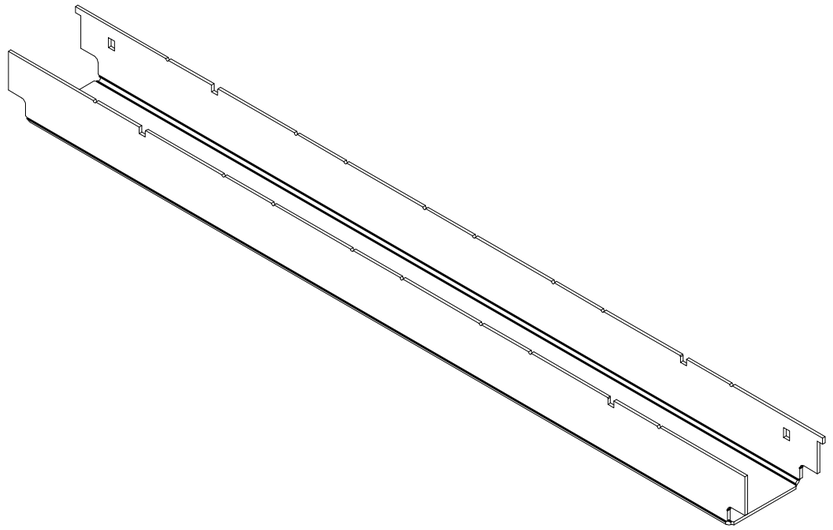

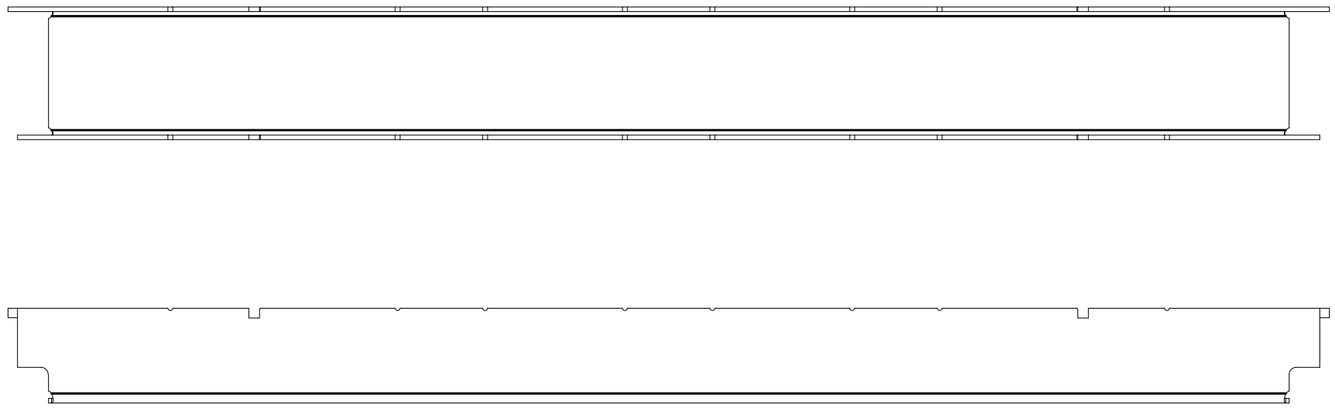

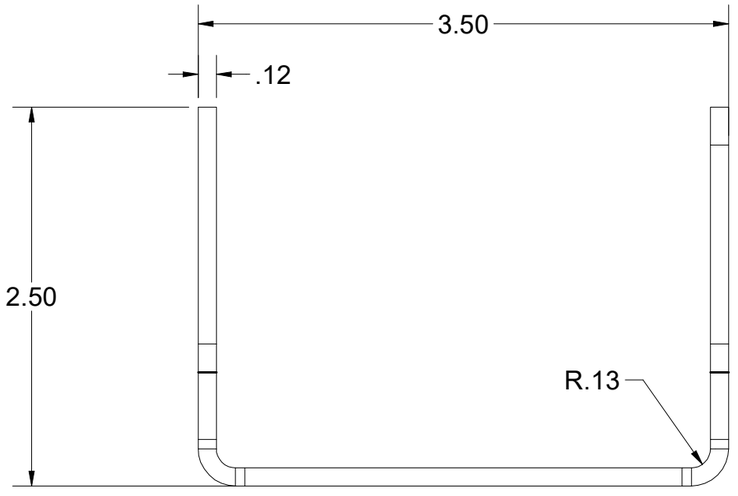

BEND TABLE				MATERIAL IFS: 100007840
BEND RADIUS	V-OPENING	BEND ANGLE	BEND DEDUCTION	MATERIAL THK: 0.1196
0.125	2	90	0.243	MAT DESCRIPTION: SHT STL GR80 GA-11 SM-HR RAW .1196

Infrastructure
JENSEN
527 Dunn Circle, Sparks, NV 89431
775-352-2716 FAX: 755-358-8127
JENSENMETALTECH.COM

©2026 Jensen Infrastructure - All rights reserved.
All materials appearing as Jensen Infrastructure documents and the like are proprietary work product and are protected under U.S. copyright and other laws. Unless in conjunction with business conducted with Jensen Infrastructure , any use of Jensen Infrastructure work product without express, written consent is prohibited, and recipient is prohibited from distributing any and all work product to non-approved third parties under penalty of civil action.
This product shall only be produced in a Jensen Infrastructure facility.

NAME & DESCRIPTION: 200063372 Door Component Steel Channel		REV: I-1-2
WEIGHT: 9.151 lbmass	DRAWN BY: D. Parlee	SHEET: 6 OF 19
CREATED: 4/27/2022	MODIFIED: 3/6/2026	

200063368.idw

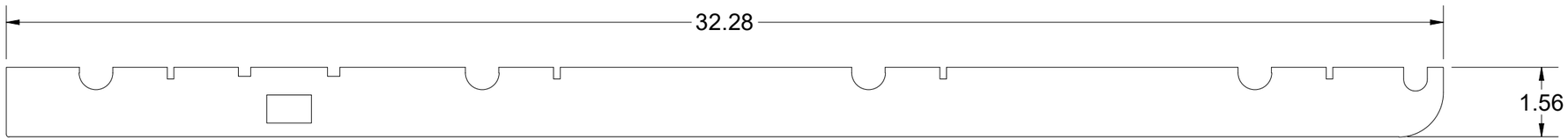



BEND TABLE			
BEND RADIUS	V-OPENING	BEND ANGLE	BEND DEDUCTION
-	-	-	-

MATERIAL IFS: 100007735

MATERIAL THK: 0.25

MAT DESCRIPTION: STL ASTM A36 SM-HRPO RAW .250

Infrastructure JENSEN
527 Dunn Circle, Sparks, NV 89431
775-352-2716 FAX: 755-358-8127
JENSENMETALTECH.COM

©2026 Jensen Infrastructure - All rights reserved.
All materials appearing as Jensen Infrastructure documents and the like are proprietary work product and are protected under U.S. copyright and other laws. Unless in conjunction with business conducted with Jensen Infrastructure , any use of Jensen Infrastructure work product without express, written consent is prohibited, and recipient is prohibited from distributing any and all work product to non-approved third parties under penalty of civil action.
This product shall only be produced in a Jensen Infrastructure facility.

NAME & DESCRIPTION: 200063374 Door Component Steel Side Bar

REV: I-1-2

WEIGHT: 3.395 lbmass

DRAWN BY: D. Parlee

CREATED: 4/27/2022

MODIFIED: 3/6/2026

SHEET: 7 OF 19

200063368.idw

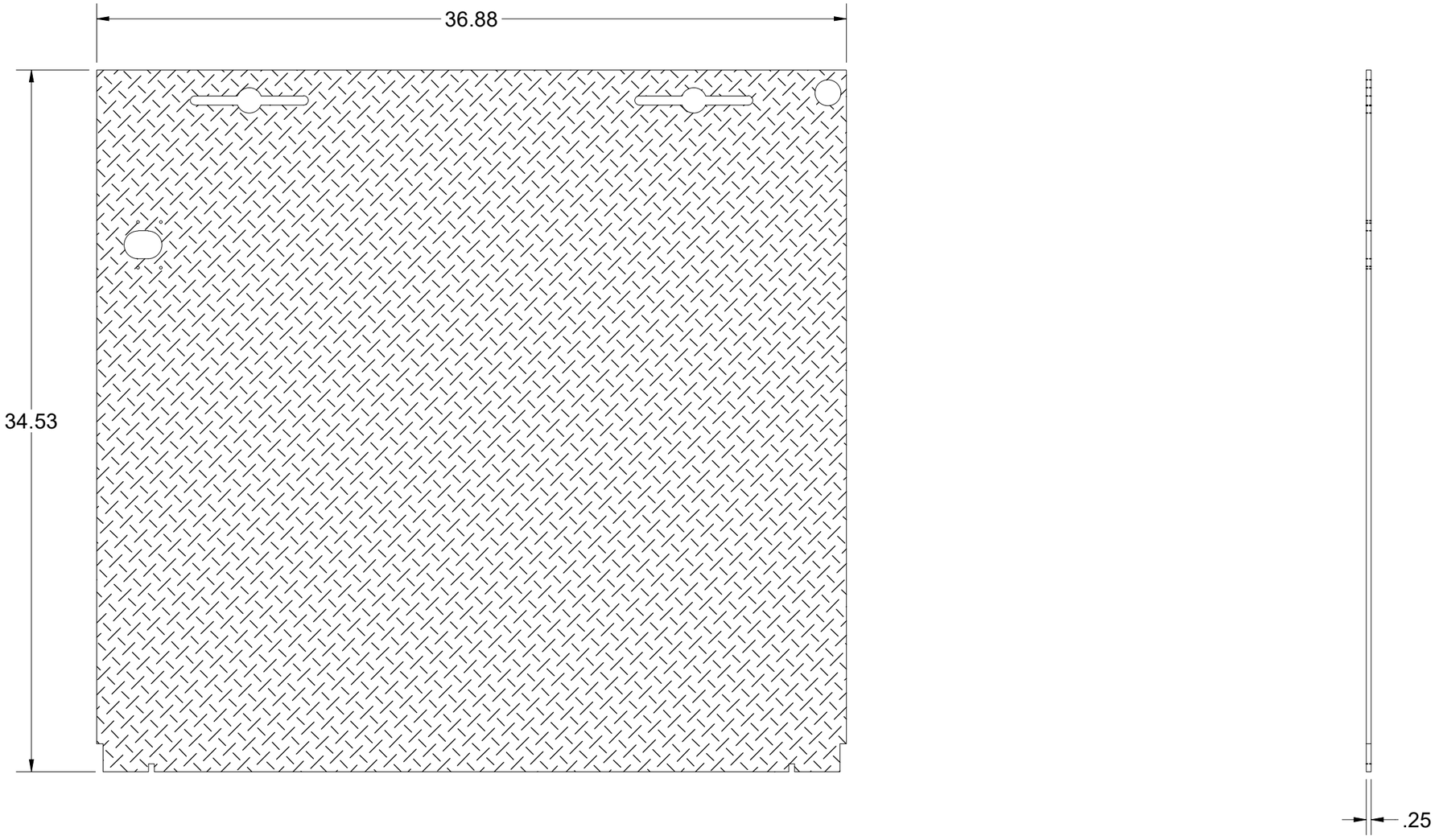

200063368.idw

BEND TABLE				MATERIAL IFS: 100007736
BEND RADIUS	V-OPENING	BEND ANGLE	BEND DEDUCTION	MATERIAL THK: 0.25
-	-	-	-	MAT DESCRIPTION: SHT STL CQ DP RAW .25 - 36 KSI YIELD

Infrastructure
JENSEN
527 Dunn Circle, Sparks, NV 89431
775-352-2716 FAX: 755-358-8127
JENSENMETALTECH.COM

©2026 Jensen Infrastructure - All rights reserved.
All materials appearing as Jensen Infrastructure documents and the like are proprietary work product and are protected under U.S. copyright and other laws.
Unless in conjunction with business conducted with Jensen Infrastructure , any use of Jensen Infrastructure work product without express, written consent is prohibited, and recipient is prohibited from distributing any and all work product to non-approved third parties under penalty of civil action.
This product shall only be produced in a Jensen Infrastructure facility.

NAME & DESCRIPTION: 200063378 Door Component Steel Plate, Top		REV: I-1-2
WEIGHT: 98.709 lbmass	DRAWN BY: D. Parlee	SHEET: 8 OF 19
CREATED: 4/27/2022	MODIFIED: 3/6/2026	

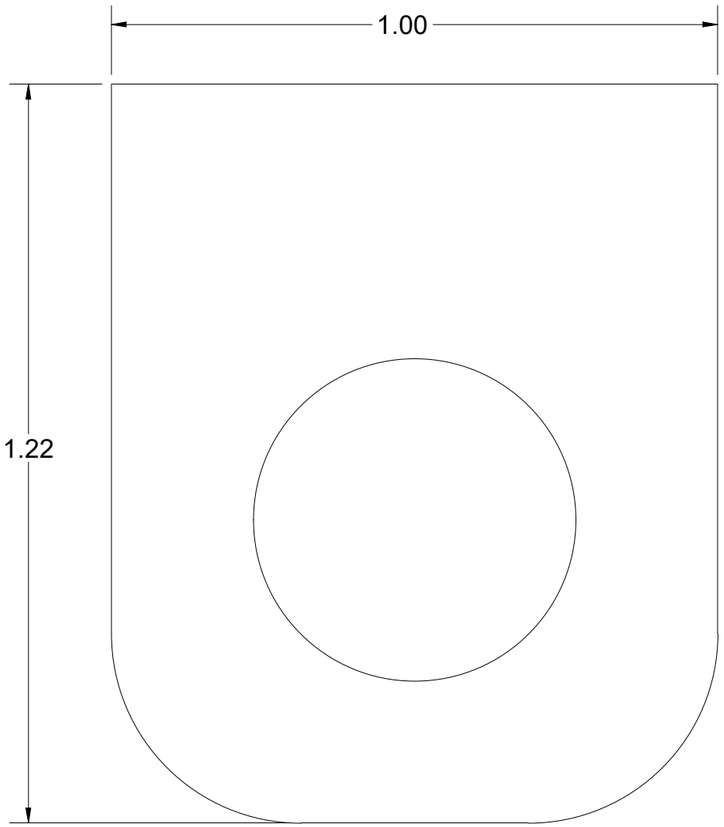

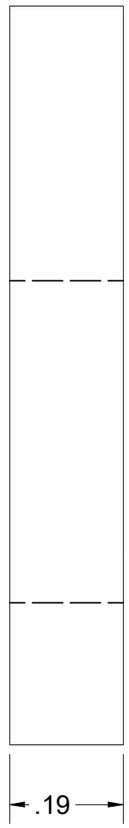

200063368.idw

BEND TABLE				MATERIAL IFS: 100007734
BEND RADIUS	V-OPENING	BEND ANGLE	BEND DEDUCTION	MATERIAL THK: 0.1875
-	-	-	-	MAT DESCRIPTION: STL ASTM A36 SM-HRPO 60X120 RAW .1875

Infrastructure
JENSEN
527 Dunn Circle, Sparks, NV 89431
775-352-2716 FAX: 755-358-8127
JENSENMETALTECH.COM

©2026 Jensen Infrastructure - All rights reserved.
All materials appearing as Jensen Infrastructure documents and the like are proprietary work product and are protected under U.S. copyright and other laws. Unless in conjunction with business conducted with Jensen Infrastructure , any use of Jensen Infrastructure work product without express, written consent is prohibited, and recipient is prohibited from distributing any and all work product to non-approved third parties under penalty of civil action.
This product shall only be produced in a Jensen Infrastructure facility.

NAME & DESCRIPTION: 200074853 Grounding Tab		REV: I-1-2
WEIGHT: 0.051 lbmass	DRAWN BY: D. Parlee	SHEET: 9 OF 19
CREATED: 4/27/2022	MODIFIED: 3/6/2026	

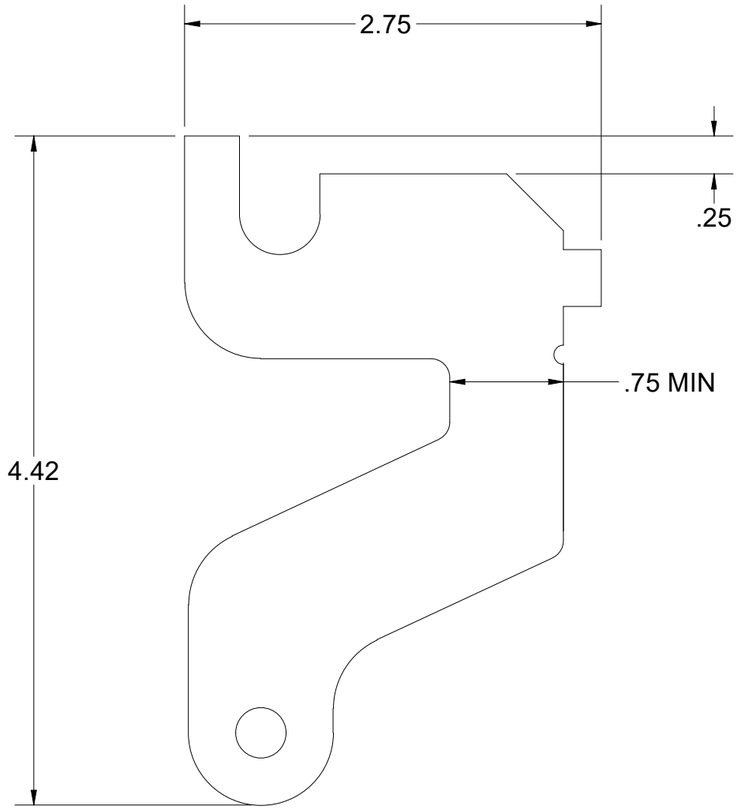

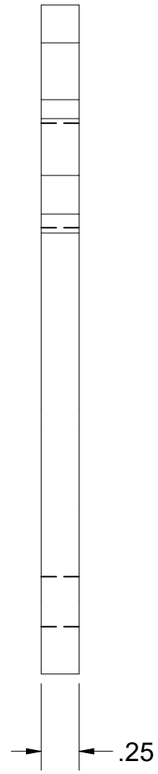

BEND TABLE				MATERIAL IFS: 100007735			
BEND RADIUS	V-OPENING	BEND ANGLE	BEND DEDUCTION	MATERIAL THK: 0.25			
-	-	-	-	MAT DESCRIPTION: STL ASTM A36 SM-HRPO RAW .250			

Infrastructure
JENSEN
527 Dunn Circle, Sparks, NV 89431
775-352-2716 FAX: 755-358-8127
JENSENMETALTECH.COM

©2026 Jensen Infrastructure - All rights reserved.
All materials appearing as Jensen Infrastructure documents and the like are proprietary work product and are protected under U.S. copyright and other laws. Unless in conjunction with business conducted with Jensen Infrastructure , any use of Jensen Infrastructure work product without express, written consent is prohibited, and recipient is prohibited from distributing any and all work product to non-approved third parties under penalty of civil action.
This product shall only be produced in a Jensen Infrastructure facility.

NAME & DESCRIPTION: 200074943 PNW Formed Member Hinge		REV: I-1-2
WEIGHT: 0.455 lbmass	DRAWN BY: D. Parlee	SHEET: 10 OF 19
CREATED: 4/27/2022	MODIFIED: 3/6/2026	

200063368.idw

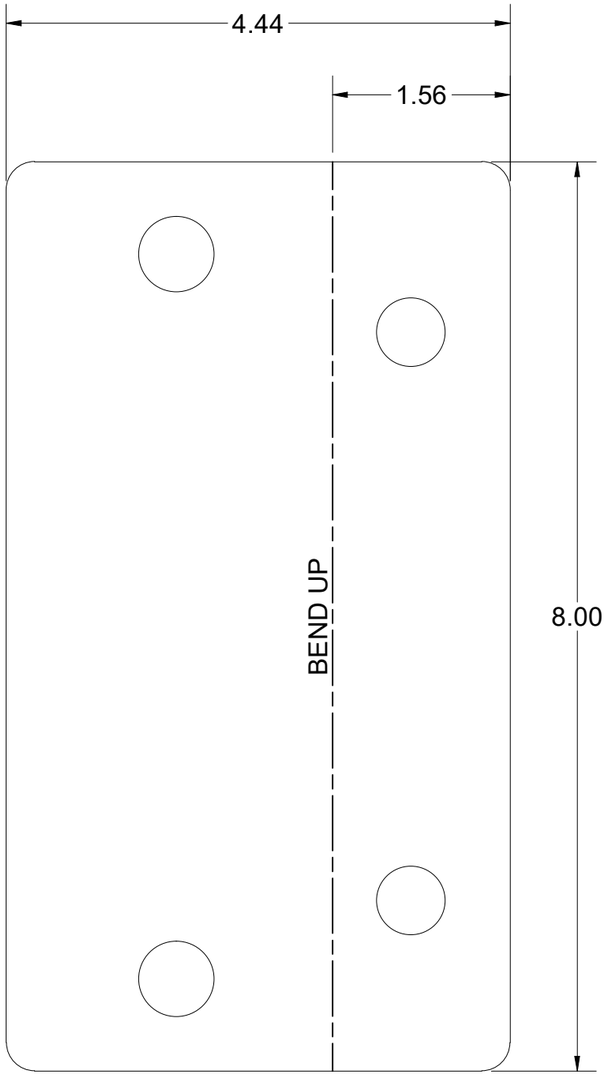

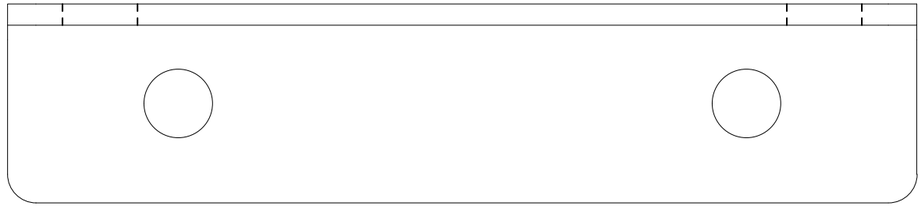

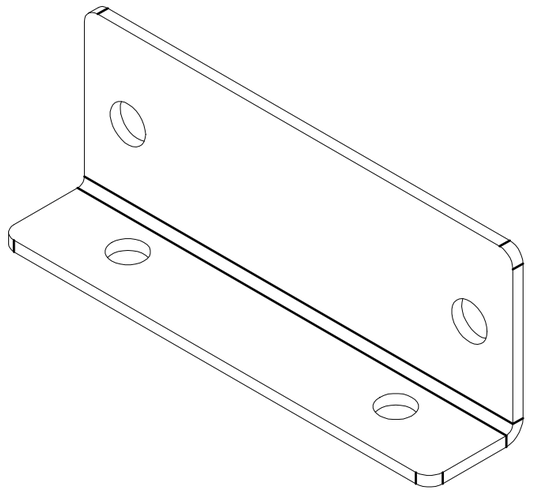

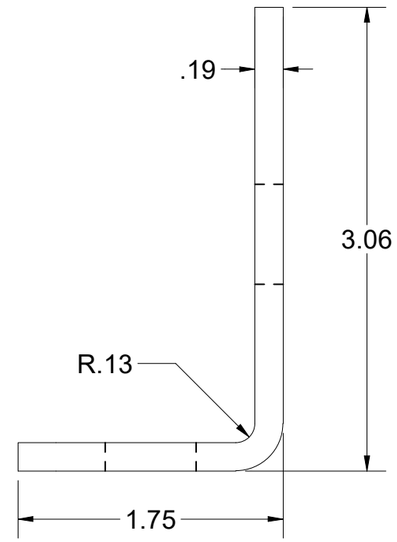

BEND TABLE			
BEND RADIUS	V-OPENING	BEND ANGLE	BEND DEDUCTION
0.125	2	90	0.375

MATERIAL IFS: 100007734

MATERIAL THK: 0.1875

MAT DESCRIPTION: STL ASTM A36 SM-HRPO 60X120 RAW .1875

Infrastructure JENSEN
527 Dunn Circle, Sparks, NV 89431
775-352-2716 FAX: 755-358-8127
JENSENMETALTECH.COM

©2026 Jensen Infrastructure - All rights reserved.
All materials appearing as Jensen Infrastructure documents and the like are proprietary work product and are protected under U.S. copyright and other laws. Unless in conjunction with business conducted with Jensen Infrastructure , any use of Jensen Infrastructure work product without express, written consent is prohibited, and recipient is prohibited from distributing any and all work product to non-approved third parties under penalty of civil action.
This product shall only be produced in a Jensen Infrastructure facility.

NAME & DESCRIPTION: 200087678 NAME PLATE FRAME ANGLE (FOR 2" FRAMES)

REV: I-1-2

WEIGHT: 1.857 lbmass

DRAWN BY: D. Parlee

CREATED: 4/27/2022

MODIFIED: 3/6/2026

SHEET: 11 OF 19

200063368.idw

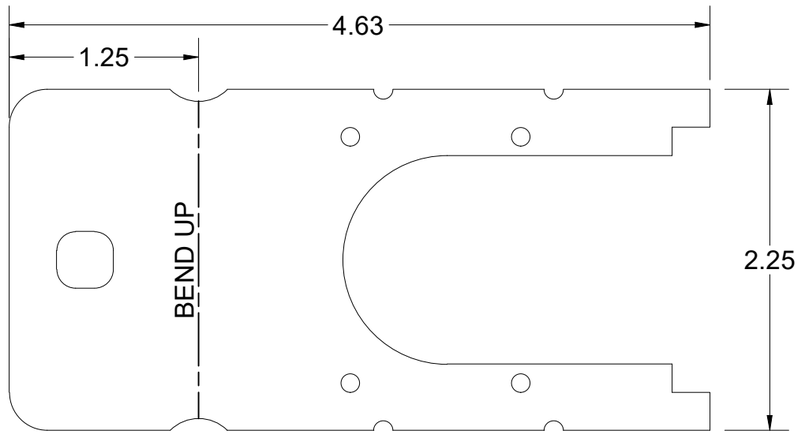

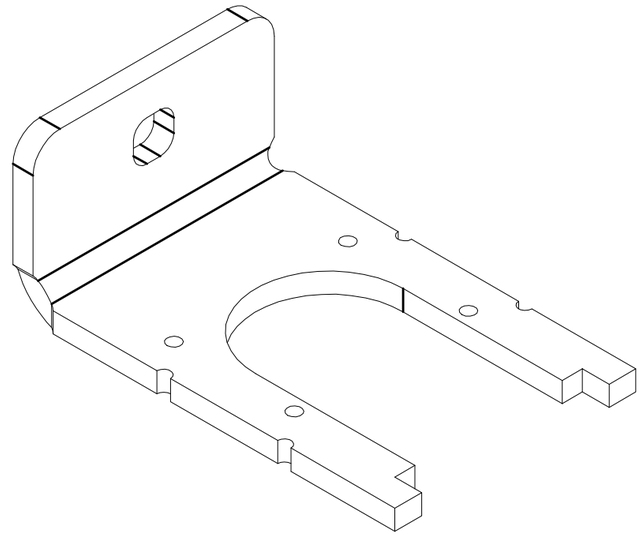

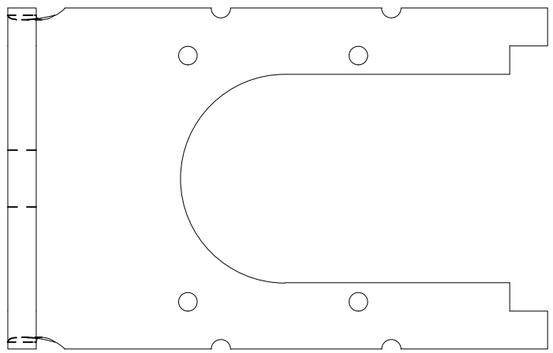

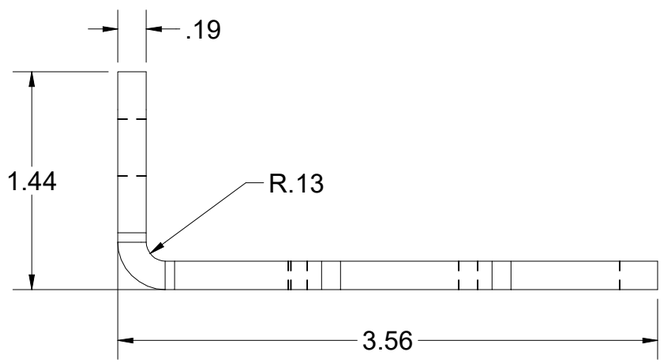

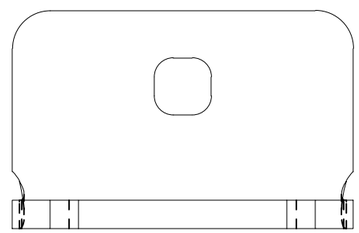

200063368.idw

BEND TABLE				MATERIAL IFS: 100007734
BEND RADIUS	V-OPENING	BEND ANGLE	BEND DEDUCTION	MATERIAL THK: 0.1875
0.125	2	90	0.3750	MAT DESCRIPTION: STL ASTM A36 SM-HRPO 60X120 RAW .1875

Infrastructure JENSEN
527 Dunn Circle, Sparks, NV 89431
775-352-2716 FAX: 755-358-8127
JENSENMETALTECH.COM

©2026 Jensen Infrastructure - All rights reserved.
All materials appearing as Jensen Infrastructure documents and the like are proprietary work product and are protected under U.S. copyright and other laws. Unless in conjunction with business conducted with Jensen Infrastructure , any use of Jensen Infrastructure work product without express, written consent is prohibited, and recipient is prohibited from distributing any and all work product to non-approved third parties under penalty of civil action.
This product shall only be produced in a Jensen Infrastructure facility.

NAME & DESCRIPTION:	200088390 Slam Latch Retainer		REV:
WEIGHT:	0.378 lbmass	DRAWN BY: D. Parlee	SHEET: 12 OF 19
CREATED:	4/27/2022	MODIFIED: 3/6/2026	

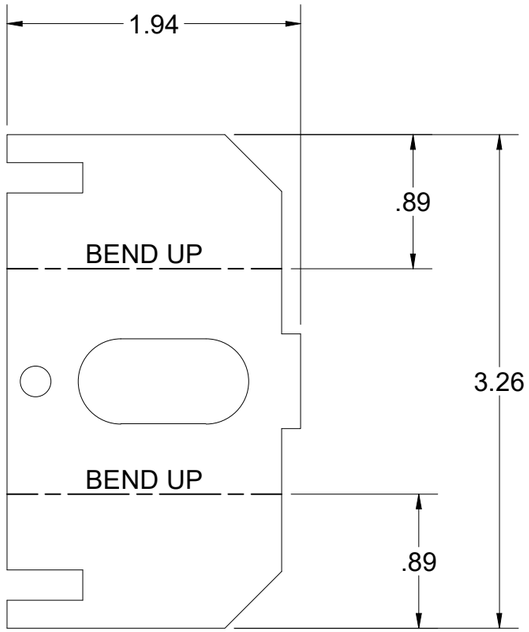

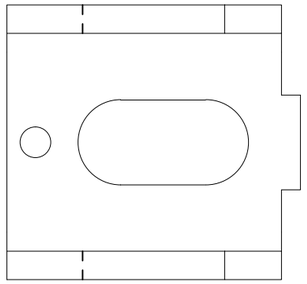

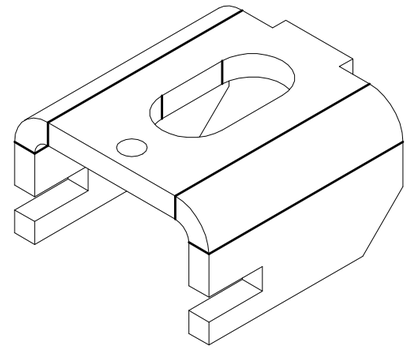

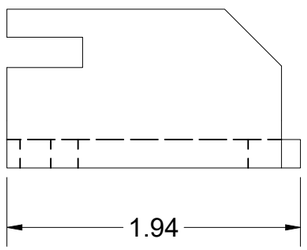

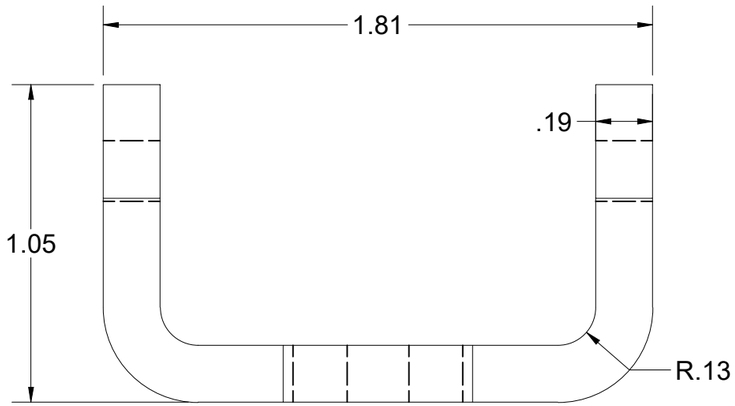

BEND TABLE				MATERIAL IFS: 100007734
BEND RADIUS	V-OPENING	BEND ANGLE	BEND DEDUCTION	MATERIAL THK: 0.1875
0.125	1	90	0.3250	MAT DESCRIPTION: STL ASTM A36 SM-HRPO 60X120 RAW .1875

Infrastructure JENSEN
527 Dunn Circle, Sparks, NV 89431
775-352-2716 FAX: 755-358-8127
JENSENMETALTECH.COM

©2026 Jensen Infrastructure - All rights reserved.
All materials appearing as Jensen Infrastructure documents and the like are proprietary work product and are protected under U.S. copyright and other laws. Unless in conjunction with business conducted with Jensen Infrastructure , any use of Jensen Infrastructure work product without express, written consent is prohibited, and recipient is prohibited from distributing any and all work product to non-approved third parties under penalty of civil action.
This product shall only be produced in a Jensen Infrastructure facility.

NAME & DESCRIPTION: 200088398 FLANGE NUT BRACKET		REV: I-1-2
WEIGHT: 0.277 lbmass	DRAWN BY: D. Parlee	SHEET: 13 OF 19
CREATED: 4/27/2022	MODIFIED: 3/6/2026	

200063368.idw

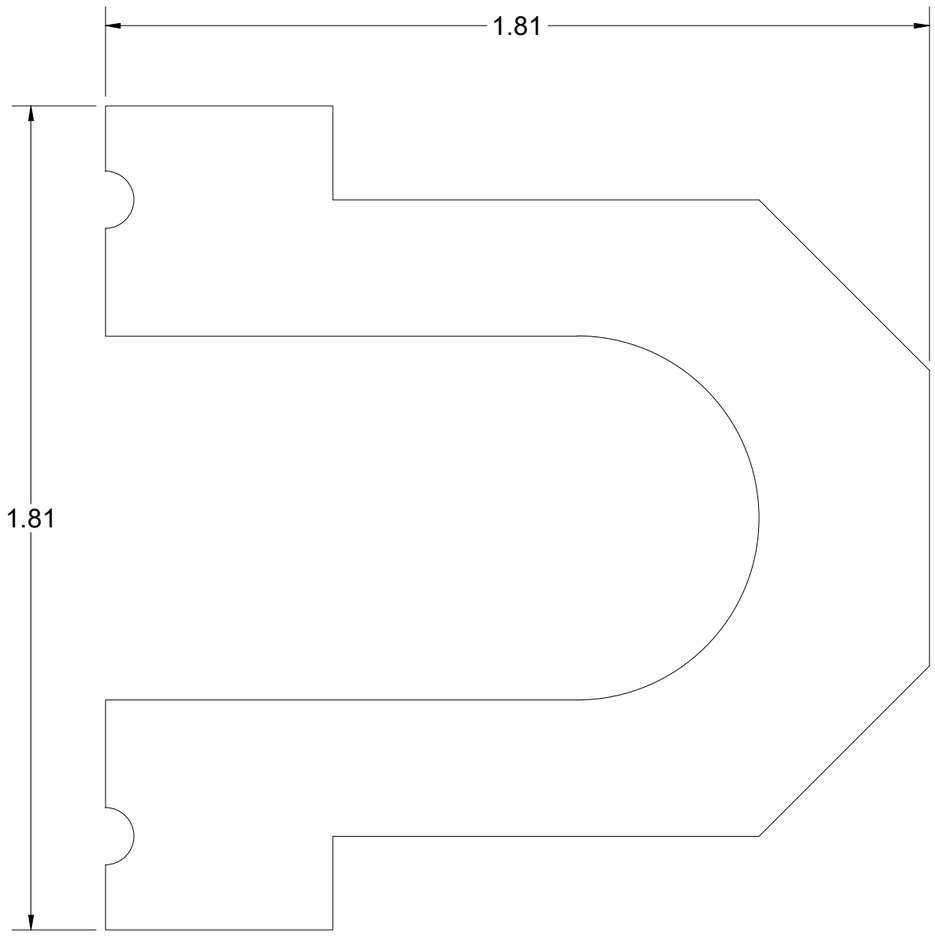

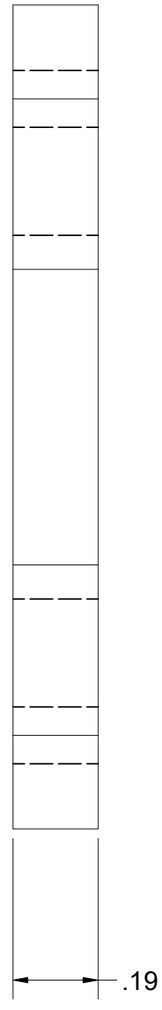

200063368.idw

BEND TABLE				MATERIAL IFS: 100007734
BEND RADIUS	V-OPENING	BEND ANGLE	BEND DEDUCTION	MATERIAL THK: 0.1875
-	-	-	-	MAT DESCRIPTION: STL ASTM A36 SM-HRPO 60X120 RAW .1875

Infrastructure
JENSEN
527 Dunn Circle, Sparks, NV 89431
775-352-2716 FAX: 755-358-8127
JENSENMETALTECH.COM

©2026 Jensen Infrastructure - All rights reserved.
All materials appearing as Jensen Infrastructure documents and the like are proprietary work product and are protected under U.S. copyright and other laws.
Unless in conjunction with business conducted with Jensen Infrastructure , any use of Jensen Infrastructure work product without express, written consent is prohibited, and recipient is prohibited from distributing any and all work product to non-approved third parties under penalty of civil action.
This product shall only be produced in a Jensen Infrastructure facility.

NAME & DESCRIPTION: 200088400 FLANGE NUT RETAINER		REV: I-1-2
WEIGHT: 0.080 lbmass	DRAWN BY: D. Parlee	SHEET: 14 OF 19
CREATED: 4/27/2022	MODIFIED: 3/6/2026	

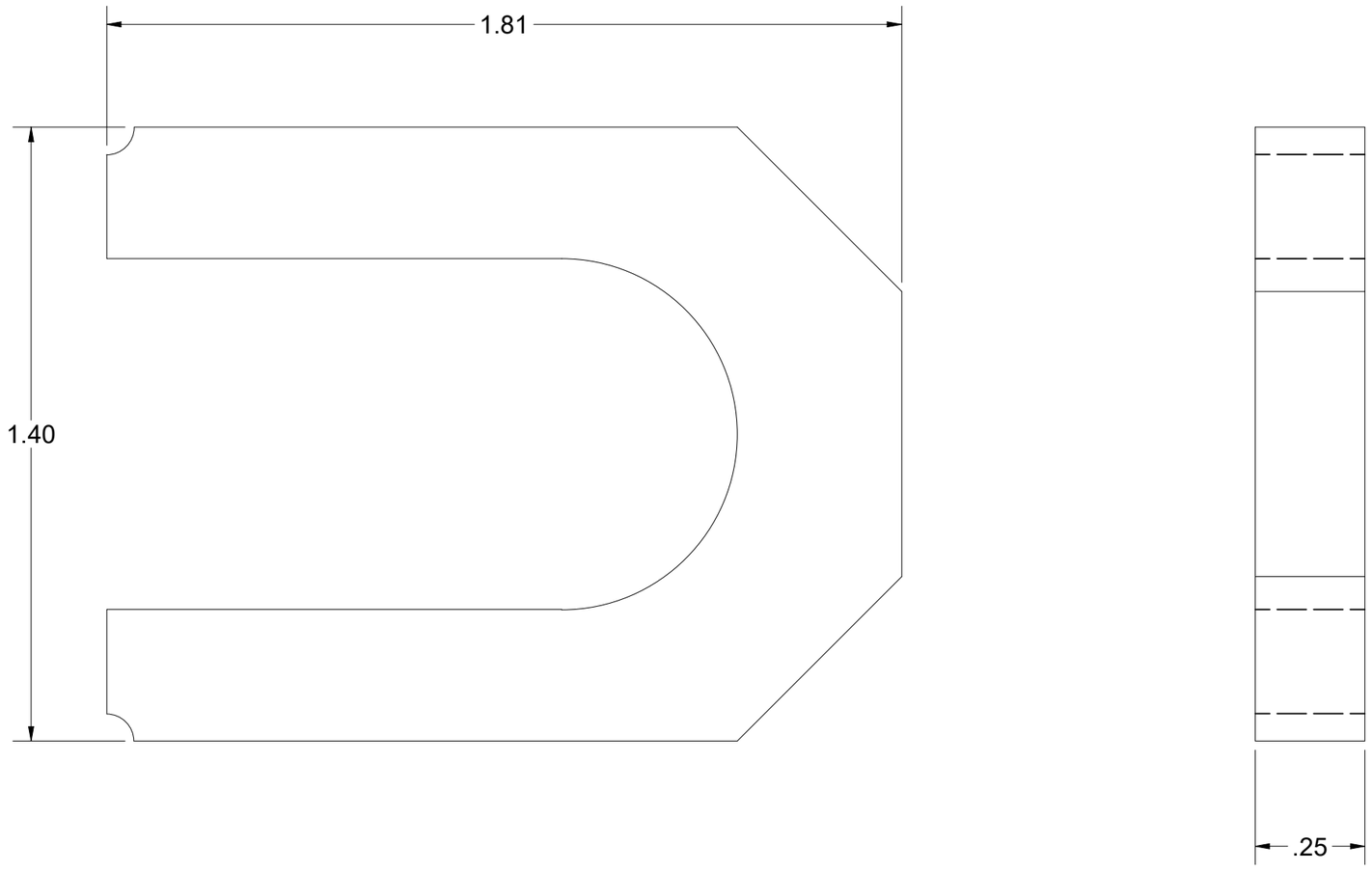

200063368.idw

BEND TABLE				MATERIAL IFS: 100007735
BEND RADIUS	V-OPENING	BEND ANGLE	BEND DEDUCTION	MATERIAL THK: 0.25
-	-	-	-	MAT DESCRIPTION: STL ASTM A36 SM-HRPO RAW .250

Infrastructure
JENSEN
527 Dunn Circle, Sparks, NV 89431
775-352-2716 FAX: 755-358-8127
JENSENMETALTECH.COM

©2026 Jensen Infrastructure - All rights reserved.
All materials appearing as Jensen Infrastructure documents and the like are proprietary work product and are protected under U.S. copyright and other laws. Unless in conjunction with business conducted with Jensen Infrastructure , any use of Jensen Infrastructure work product without express, written consent is prohibited, and recipient is prohibited from distributing any and all work product to non-approved third parties under penalty of civil action.
This product shall only be produced in a Jensen Infrastructure facility.

NAME & DESCRIPTION: 200088401 FLANGE NUT SHIM PLATE		REV: I-1-2
WEIGHT: 0.093 lbmass	DRAWN BY: D. Parlee	SHEET: 15 OF 19
CREATED: 4/27/2022	MODIFIED: 3/6/2026	

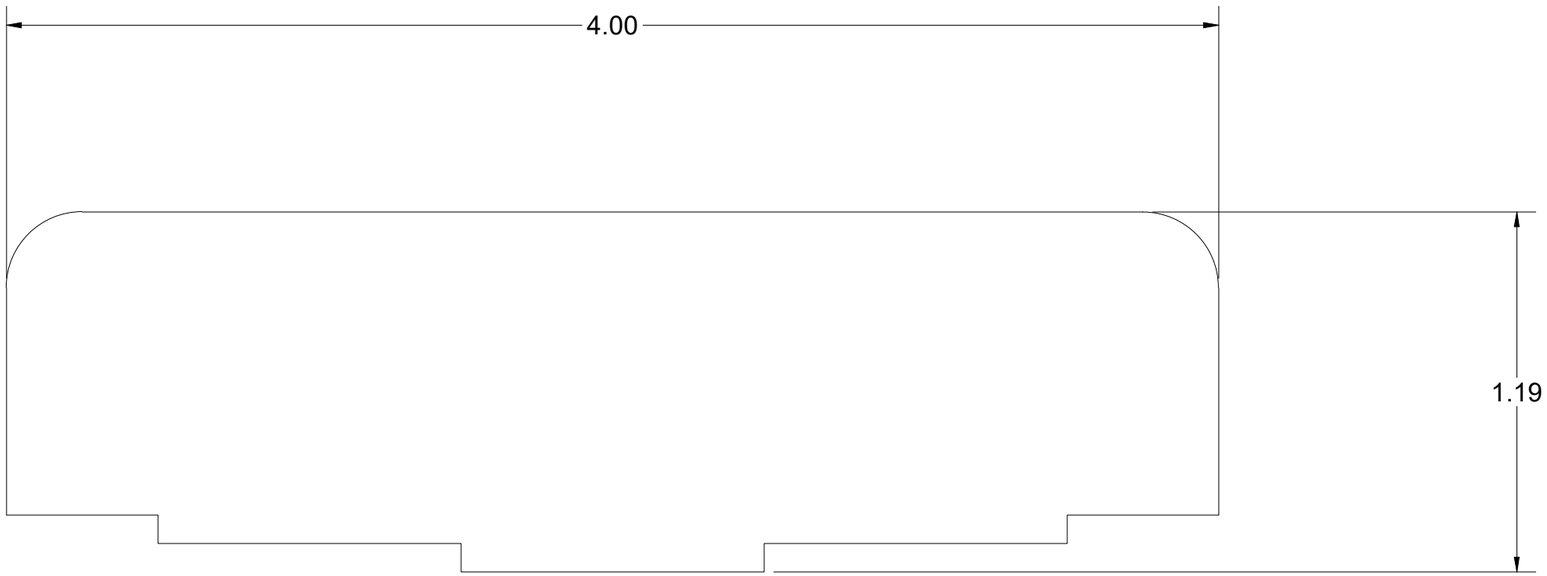



BEND TABLE			
BEND RADIUS	V-OPENING	BEND ANGLE	BEND DEDUCTION
-	-	-	-

MATERIAL IFS: 100007735

MATERIAL THK: 0.25

MAT DESCRIPTION: STL ASTM A36 SM-HRPO RAW .250

Infrastructure JENSEN

527 Dunn Circle, Sparks, NV 89431
775-352-2716 FAX: 755-358-8127
JENSENMETALTECH.COM

©2026 Jensen Infrastructure - All rights reserved.
All materials appearing as Jensen Infrastructure documents and the like are proprietary work product and are protected under U.S. copyright and other laws. Unless in conjunction with business conducted with Jensen Infrastructure , any use of Jensen Infrastructure work product without express, written consent is prohibited, and recipient is prohibited from distributing any and all work product to non-approved third parties under penalty of civil action.
This product shall only be produced in a Jensen Infrastructure facility.

NAME & DESCRIPTION: 200092276
Frame Component Steel Slam Latch Catch

REV: I-1-2

WEIGHT: 0.309 lbmass

DRAWN BY: D. Parlee

CREATED: 4/27/2022

MODIFIED: 3/6/2026

SHEET: 16 OF 19

200063368.idw

NOT SYMMETRICAL

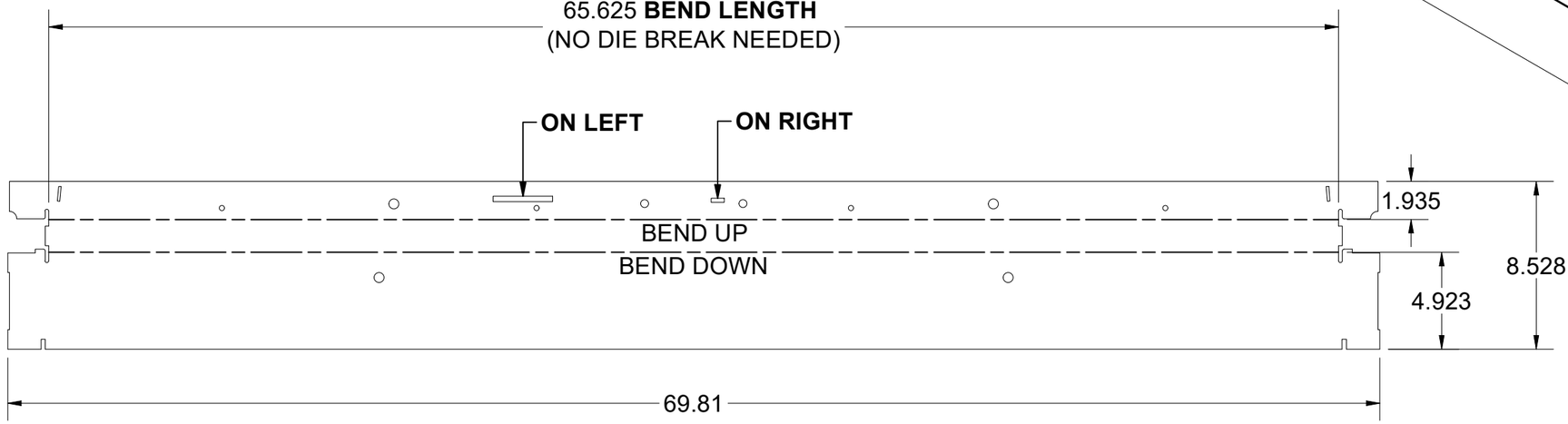

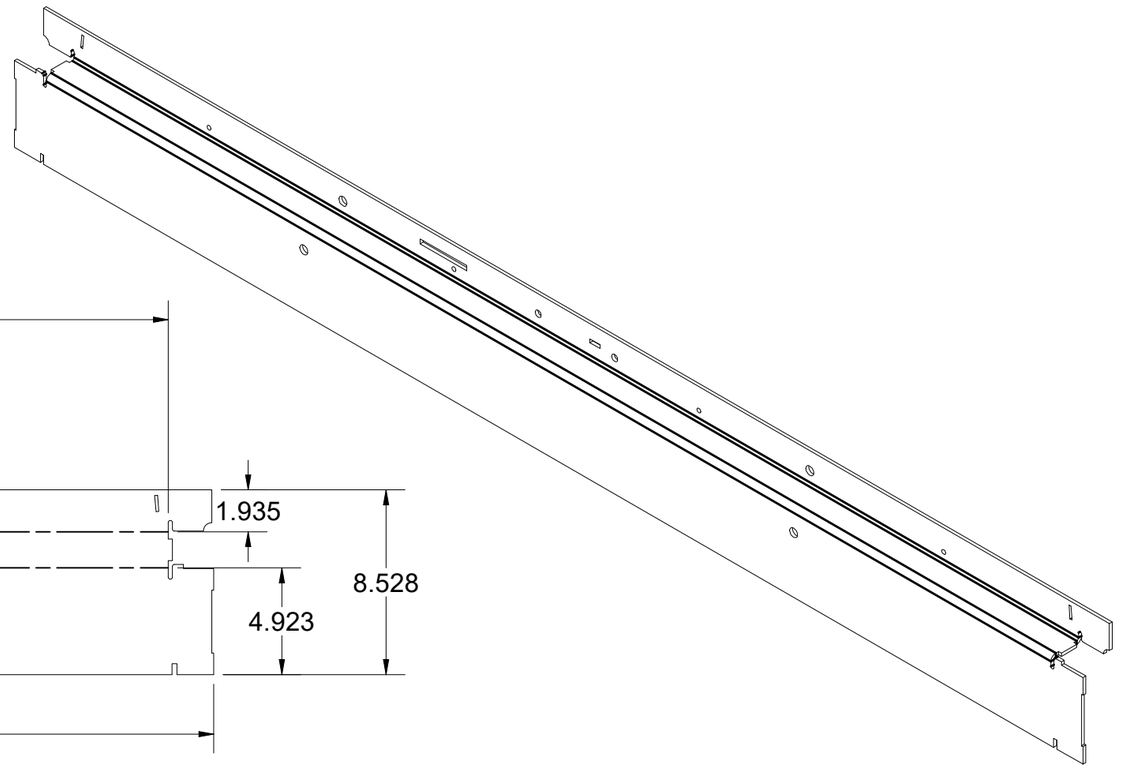

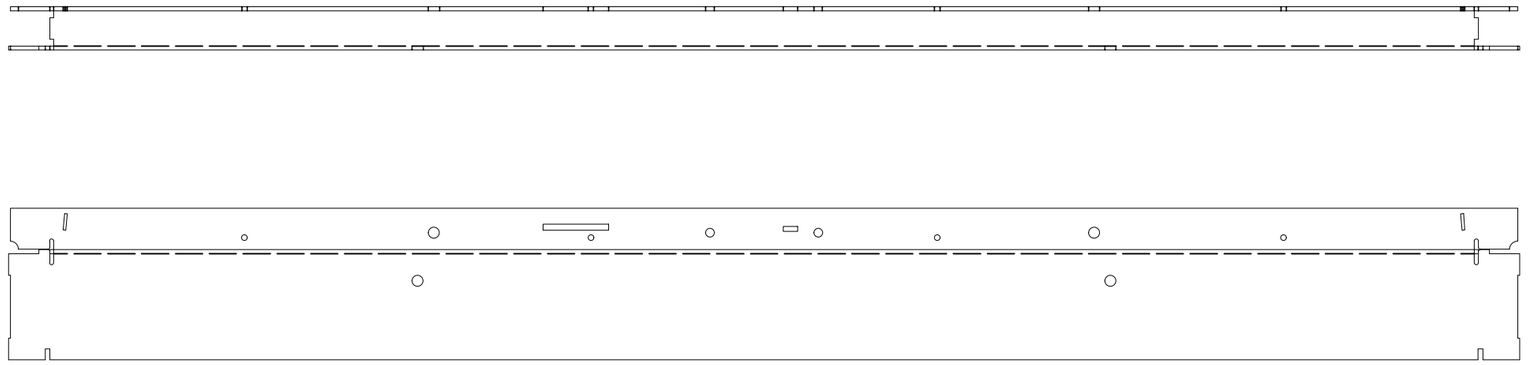

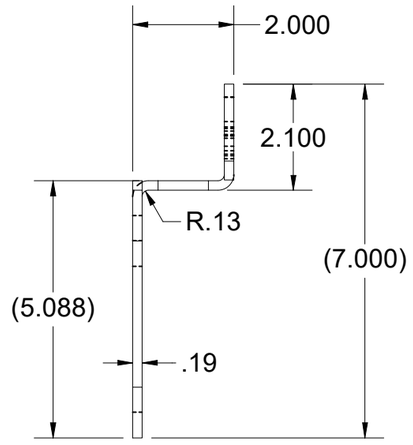

BEND TABLE			
BEND RADIUS	V-OPENING	BEND ANGLE	BEND DEDUCTION
0.125	1.5	90	0.33

MATERIAL IFS: 100007734

MATERIAL THK: 0.1875

MAT DESCRIPTION: STL ASTM A36 SM-HRPO 60X120 RAW .1875

Infrastructure JENSEN

527 Dunn Circle, Sparks, NV 89431
775-352-2716 FAX: 755-358-8127
JENSENMETALTECH.COM

©2026 Jensen Infrastructure - All rights reserved. All materials appearing as Jensen Infrastructure documents and the like are proprietary work product and are protected under U.S. copyright and other laws. Unless in conjunction with business conducted with Jensen Infrastructure , any use of Jensen Infrastructure work product without express, written consent is prohibited, and recipient is prohibited from distributing any and all work product to non-approved third parties under penalty of civil action. This product shall only be produced in a Jensen Infrastructure facility.

NAME & DESCRIPTION: 200100311
Frame Component Steel Frame Side, Cast In

REV: I-1-2

WEIGHT: 31.418 lbmass

DRAWN BY: D. Parlee

CREATED: 4/27/2022

MODIFIED: 3/6/2026

SHEET: 17 OF 19

200063368.idw

SYMMETRICAL,
DIFFERENT BEND LENGTHS

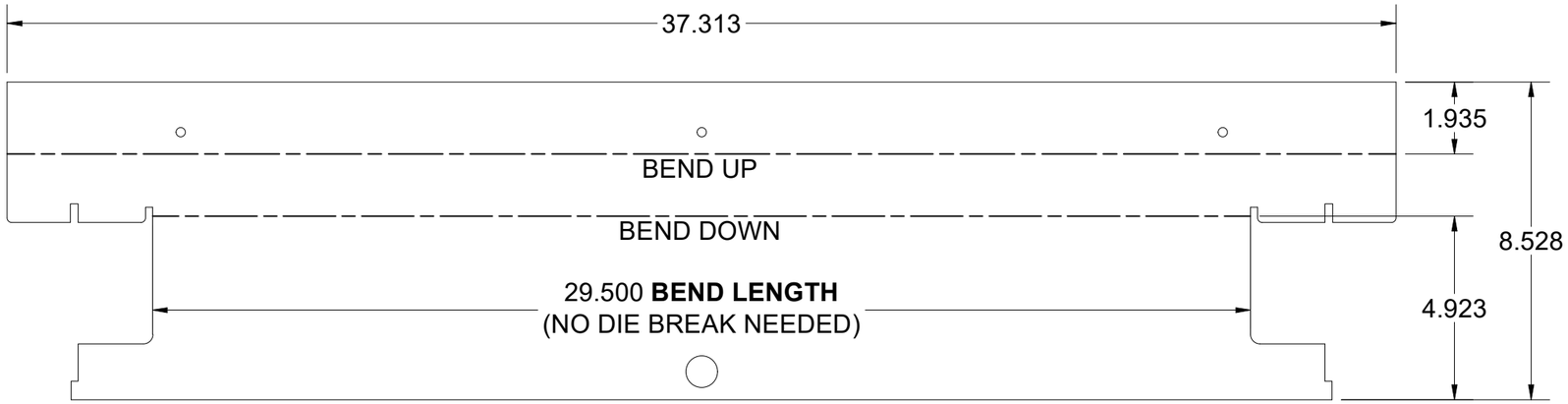

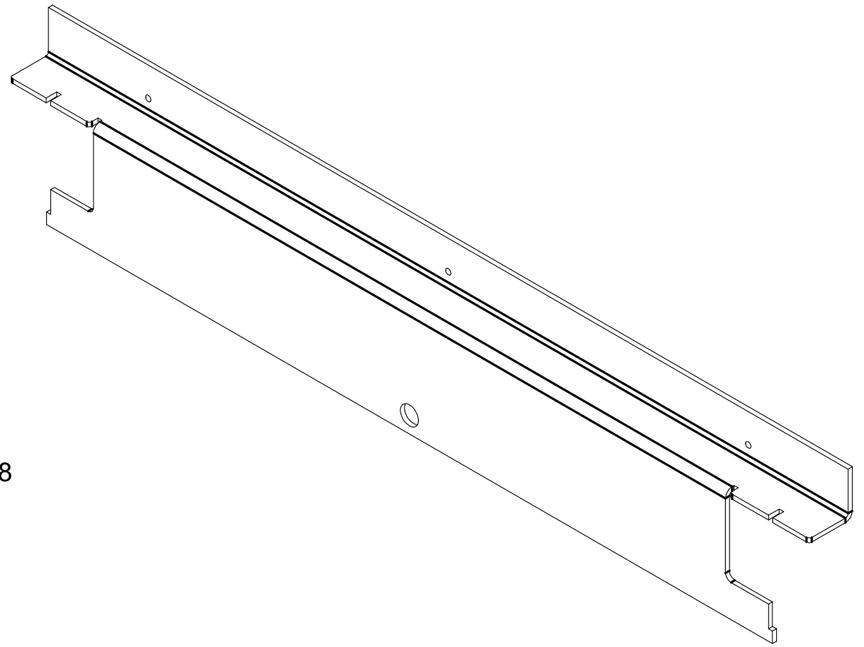

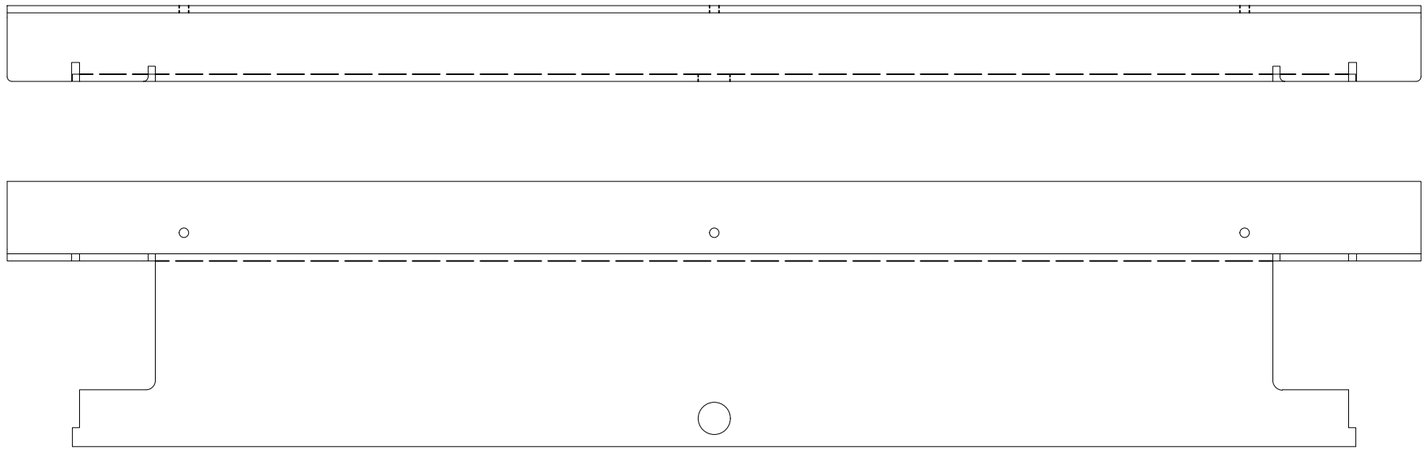

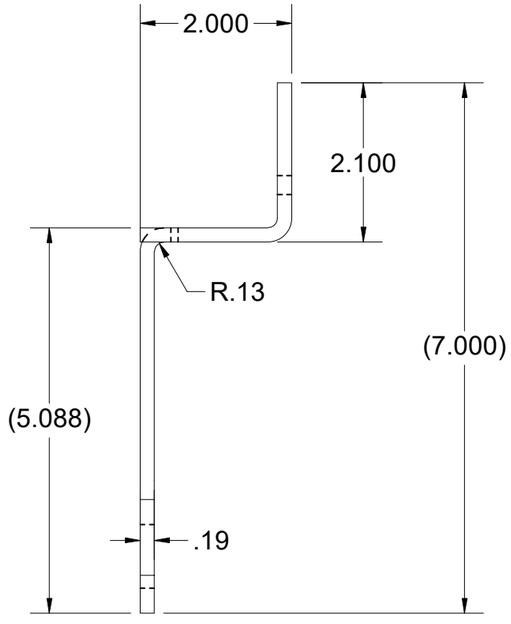

BEND TABLE			
BEND RADIUS	V-OPENING	BEND ANGLE	BEND DEDUCTION
0.125	1.5	90	0.33

MATERIAL IFS: 100007734

MATERIAL THK: 0.1875

MAT DESCRIPTION: STL ASTM A36 SM-HRPO 60X120 RAW .1875

Infrastructure
JENSEN
527 Dunn Circle, Sparks, NV 89431
775-352-2716 FAX: 755-358-8127
JENSENMETALTECH.COM

©2026 Jensen Infrastructure - All rights reserved. All materials appearing as Jensen Infrastructure documents and the like are proprietary work product and are protected under U.S. copyright and other laws. Unless in conjunction with business conducted with Jensen Infrastructure , any use of Jensen Infrastructure work product without express, written consent is prohibited, and recipient is prohibited from distributing any and all work product to non-approved third parties under penalty of civil action.
This product shall only be produced in a Jensen Infrastructure facility.

NAME & DESCRIPTION: 200100312
Frame Component Steel Frame End, Cast In

REV: I-1-2

WEIGHT: 15.389 lbmass

DRAWN BY: D. Parlee

CREATED: 4/27/2022

MODIFIED: 3/6/2026

SHEET: 18 OF 19

200063368.idw

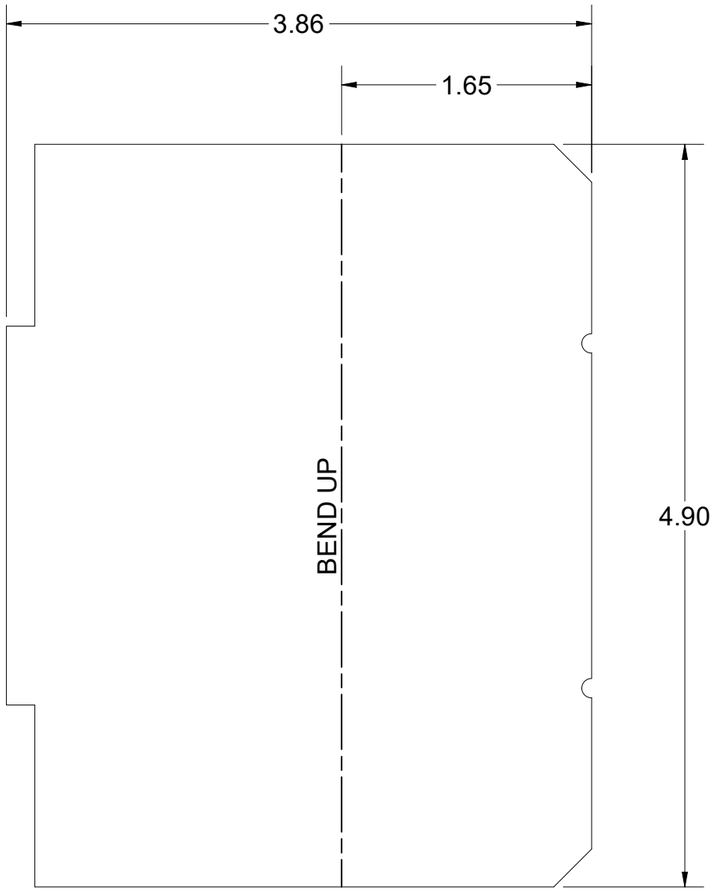

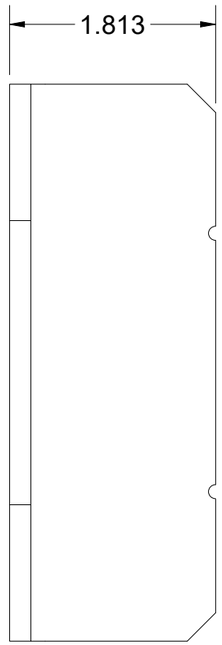

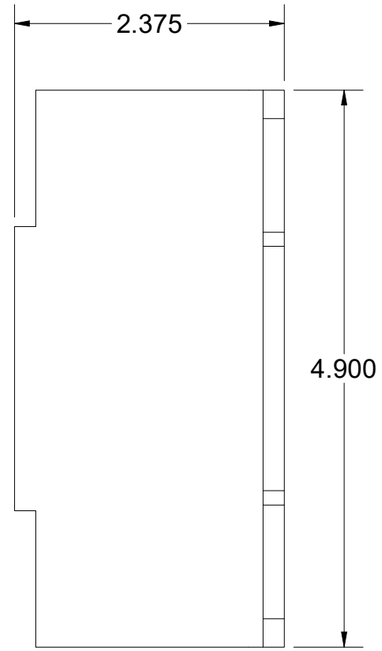

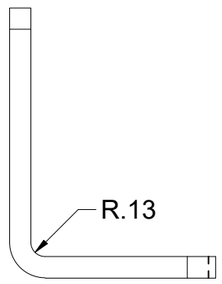

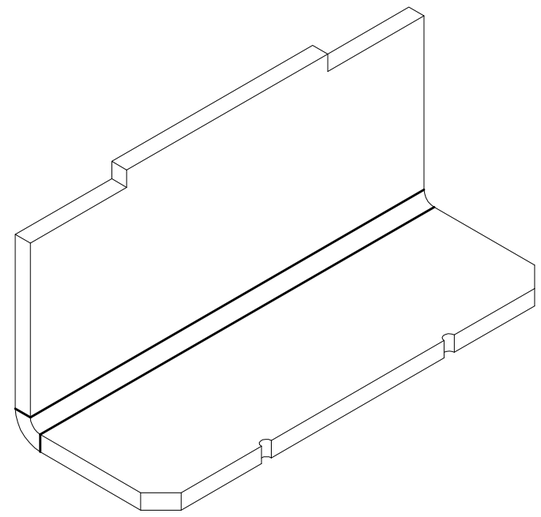

200063368.idw

BEND TABLE			
BEND RADIUS	V-OPENING	BEND ANGLE	BEND DEDUCTION
0.125	1	90	0.325

MATERIAL IFS: 100007734

MATERIAL THK: 0.1875

MAT DESCRIPTION: STL ASTM A36 SM-HRPO 60X120 RAW .1875

Infrastructure
JENSEN
527 Dunn Circle, Sparks, NV 89431
775-352-2716 FAX: 755-358-8127
JENSENMETALTECH.COM

©2026 Jensen Infrastructure - All rights reserved.
All materials appearing as Jensen Infrastructure documents and the like are proprietary work product and are protected under U.S. copyright and other laws. Unless in conjunction with business conducted with Jensen Infrastructure , any use of Jensen Infrastructure work product without express, written consent is prohibited, and recipient is prohibited from distributing any and all work product to non-approved third parties under penalty of civil action.
This product shall only be produced in a Jensen Infrastructure facility.

NAME & DESCRIPTION: 200100313
Frame Component Steel Skirt Pocket Angle

REV: I-1-2

WEIGHT: 0.990 lbmass

DRAWN BY: D. Parlee

CREATED: 4/27/2022

MODIFIED: 3/6/2026

SHEET: 19 OF 19