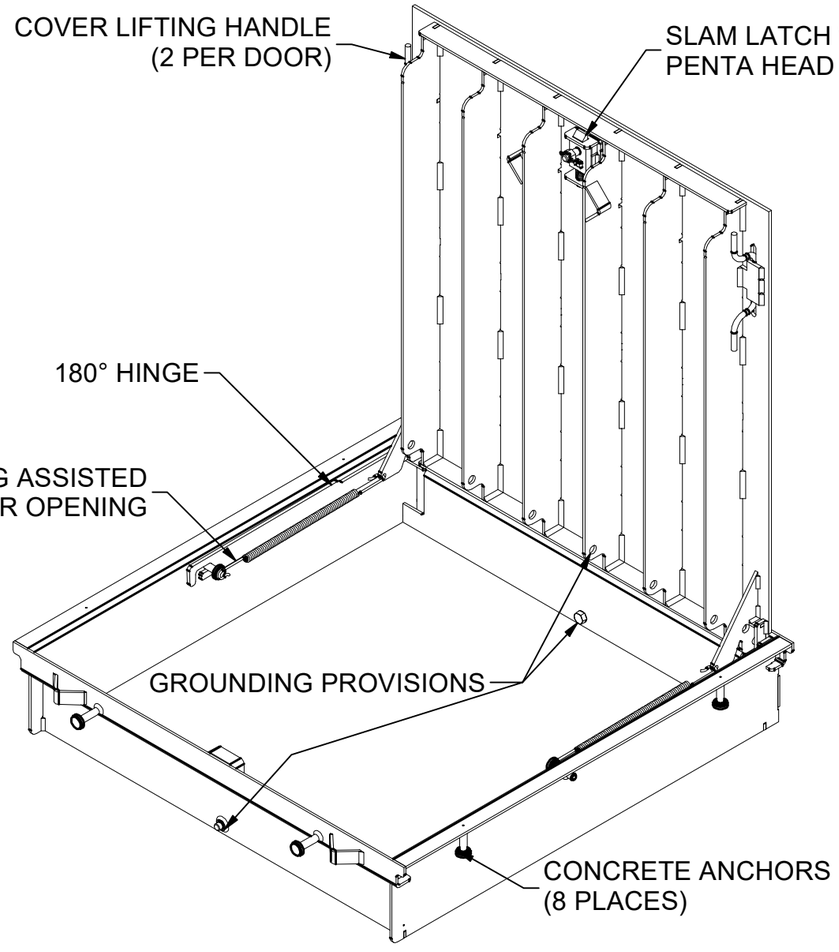

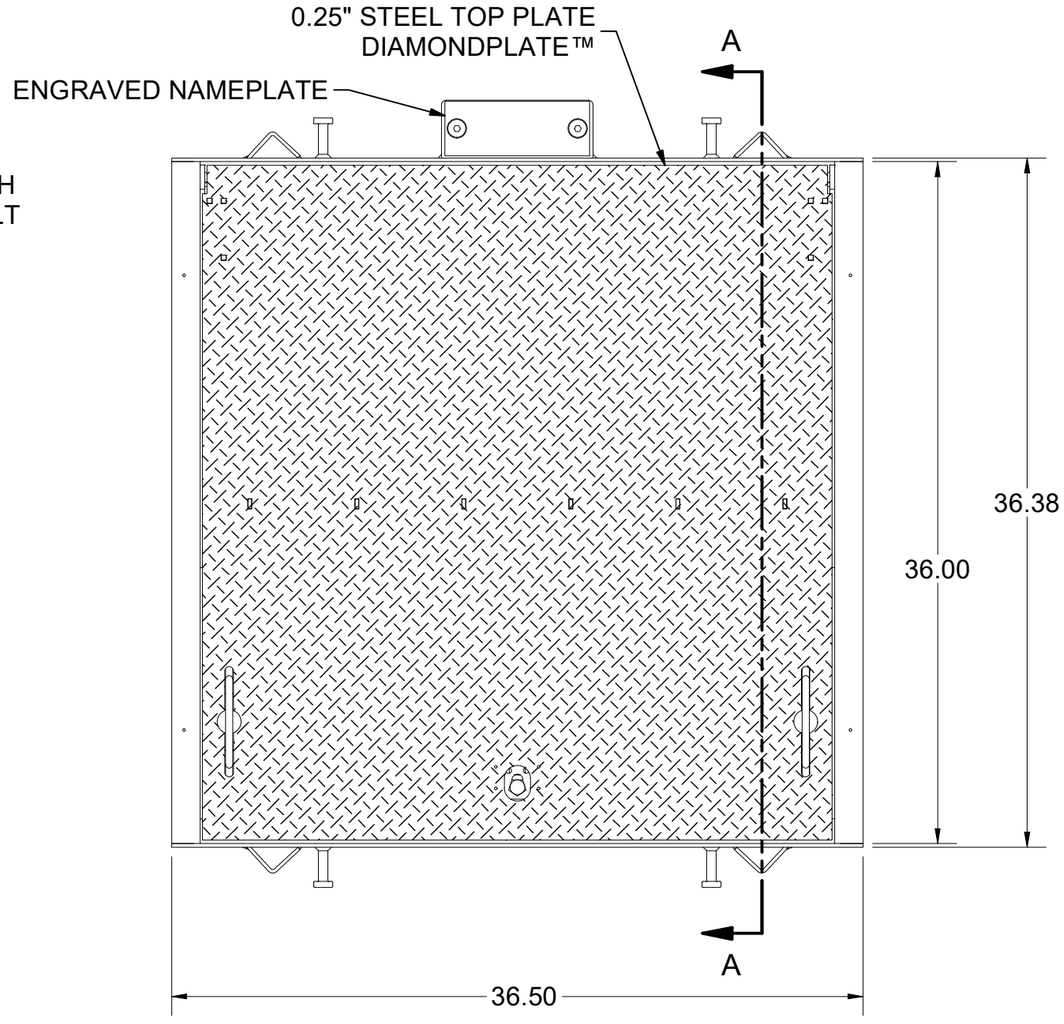

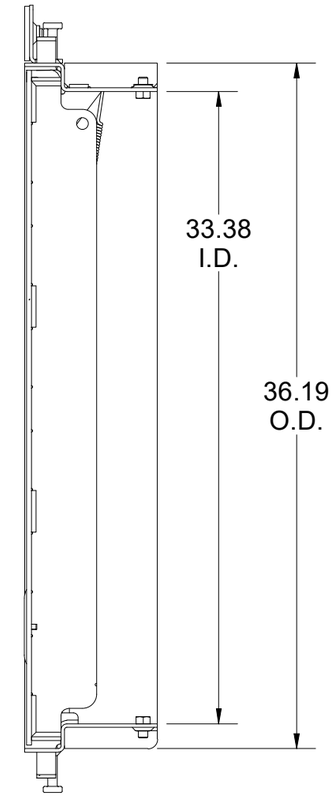

SECTION A-A
SCALE 1/8

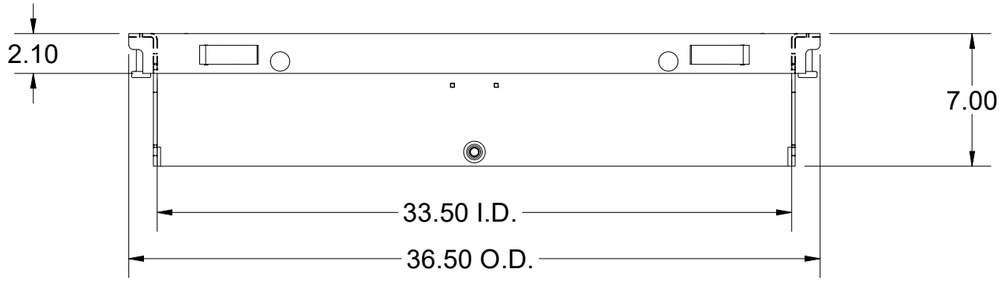

200061796.idw

LOADING CRITERIA: ASTM C1802 Load Level 04

16,000 lb load on 10" x 20" footprint, without impact restricted to parking spaces and areas within close proximity of roadways.

SURFACE:	Diamond Plate	FINISH:	Galvanized
WEIGHT:	212.79 lbs	MARKING:	None

Infrastructure
JENSEN
527 Dunn Circle, Sparks, NV 89431
775-352-2716 FAX: 755-358-8127
JENSENMETALTECH.COM

©2026 Jensen Infrastructure - All rights reserved.
All materials appearing as Jensen Infrastructure documents and the like are proprietary work product and are protected under U.S. copyright and other laws. Unless in conjunction with business conducted with Jensen Infrastructure , any use of Jensen Infrastructure work product without express, written consent is prohibited, and recipient is prohibited from distributing any and all work product to non-approved third parties under penalty of civil action.
This product shall only be produced in a Jensen Infrastructure facility.

DESCRIPTION: CAS1-3333-CHF4-DP-G-BD-GR-SL-PNW-OH07-332

33x33 Standard Cover Assembly (Loading Criteria Per ASTM C1802 Load Level 04, Steel, Hinged, Full Range, Handle (2 Per Door), Diamond Plate, Galvanized, Grounding, PNW 332) 07

REV: H-1-3

SHEET: 1

PART NUMBER:	200061796	DRAWN BY:	R. Dohr
CREATED:	3/28/2022	MODIFIED:	2/26/2026

BILL OF MATERIALS

ITEM	ITEM QTY	QTY	PART NUMBER	DESCRIPTION	PART NAME
1	1	1	200061797	DAS1-SD-3333-HF4-DP-G-BD-332	200061797
2	1	1	200099069	FAS-3333-CH-G-SL-OH02-PNW-332	200099069
3	2	2	100040068	CUSTOM EXTENSION SPRING:50LB-IN,15.352 IN LNG, .70 OD, .148 WIRE DIA	100040068
4	1	1	200084519	1/2" THK Cam Latch 304SS	200084519
5	1	1	100007915	SPRING COMPRESSION 055 X 5/8 X 7/8 LONG	100007915
6	1	1	100007862	HEX NUT NYLOCK - 5/16-18 UNC - 304SS	100007862
7	2	2	100007733	Bolt Socket Flat Countersunk Head - 1/2-13 UNC - Grade 5 - Zinc - FT - 1"	100007872
8	2	2	100003484	Hex Bolt 1/2-13 UNC ZINC - FT - 0.75"	100003484
9	1	1	200071526	PNW HINGE SPRING MOUNT, 2" DEEP FRAME, LEFT	200071526
10	1	1	200071527	PNW HINGE SPRING MOUNT, 2" DEEP FRAME, RIGHT	200071527
11	1	1	100004002	Hex Bolt 5/16-18 UNC 316SS - PT - 2"	100004002
12	1	1	100007391	NAME PLATE STEEL - BLANK	100007391
13	1	1	100007729	HEX NUT SLOTTED CASTLE HEAD 1/2-13 SS	100007729
14	1	1	100007918	COTTER PIN 0.094DIA X 1-1/4	100007918
15	1	1	100007749	BOLT PENTA 1/2-13 UNC 0.875 HEAD 2.25L SS DRILLED	100007749

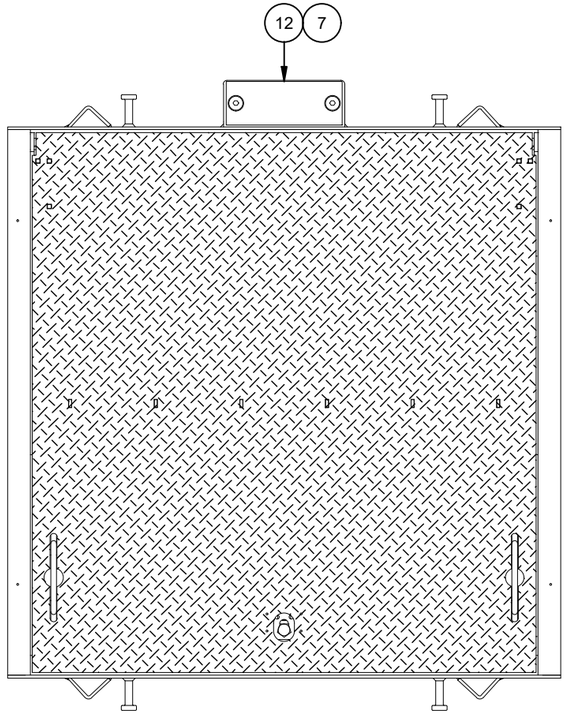

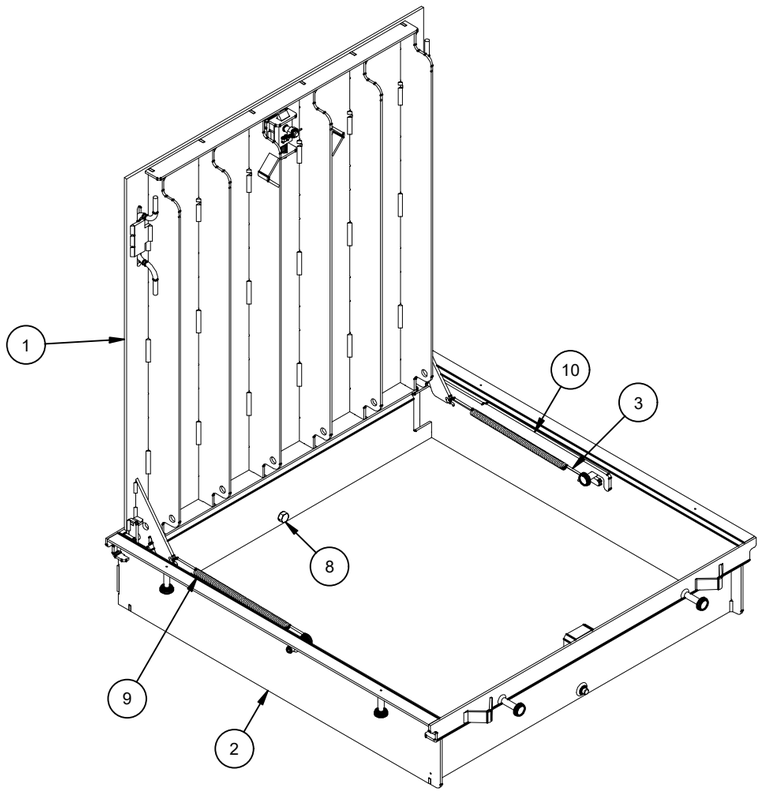

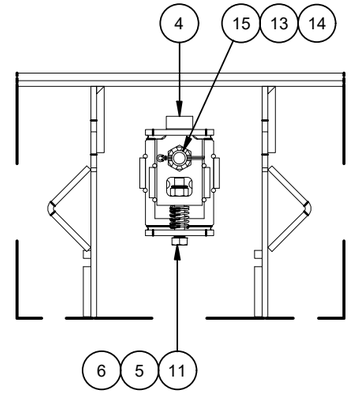

DETAIL A
SCALE 1/5

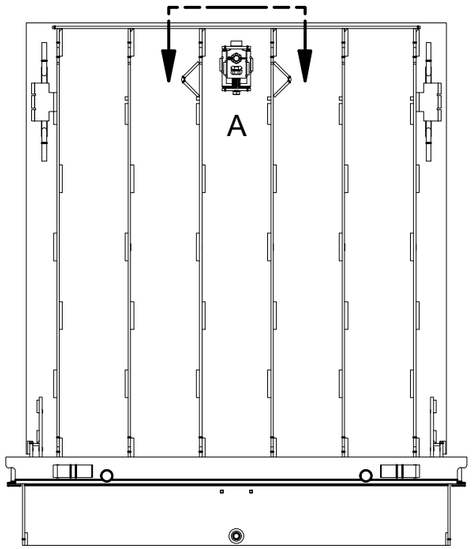

200061796.idw

REVISION HISTORY		
DESCRIPTION	DATE	REVISED BY
REVISED HINGE DOUBLER TO EASE WELDING. ADDED MIDDLE TAB TO STIFFENERS FOR ROBOT	2/26/2026	R. DOHR
REMOVED TABS FOR ROBOT WELDING AND CHANGED WELD STAGGER FOR ROBOT WELD	2/24/2026	M. BOUCHARD
CHANGED TO STAGGERED WELDS, ADDED FITMENT NOTCHES TO FRAME, UPDATED SLAM LATCH HARDWARE, CHANGED WELD NOTCHES	6/4/2025	Michael Newman
RE-CALC'D DOOR AND UPDATED DESIGN BASED ON CALC, UPDATED SPRING MOUNTING TO REDUCE TENSION AND LIFTING FORCE, WENT TO A DIFFERENT FRAME STYLE WITH A DEEPER TOP SHELF (FOR MANUFACTURABILITY)	3/17/2025	Michael Newman

MATERIAL FINISH: Galvanized

MATERIAL SURFACE: Diamond Plate

Infrastructure
JENSEN
527 Dunn Circle, Sparks, NV 89431
775-352-2716 FAX: 755-358-8127
JENSENMETALTECH.COM

©2026 Jensen Infrastructure - All rights reserved.
All materials appearing as Jensen Infrastructure documents and the like are proprietary work product and are protected under U.S. copyright and other laws. Unless in conjunction with business conducted with Jensen Infrastructure , any use of Jensen Infrastructure work product without express, written consent is prohibited, and recipient is prohibited from distributing any and all work product to non-approved third parties under penalty of civil action.
This product shall only be produced in a Jensen Infrastructure facility.

PART NUMBER & DESCRIPTION: 200061796
CAS1-3333-CHF4-DP-G-BD-GR-SL-PNW-OH07-332

REV: H-1-3

WEIGHT: 212.79 Lbs

DRAWN BY: R. Dohr

CREATED: 3/28/2022

MODIFIED: 2/26/2026

SHEET: 2

BILL OF MATERIALS

ITEM	UNIT QTY	QTY	PART NUMBER	DESCRIPTION	PART NAME
1	91.757 lbmass	91.757 lbmass	100007736	Door Component Steel Plate, Top	200061802
2	2.382 lbmass	4.764 lbmass	100007734	Door Component Steel Side Bar	200061801
3	0.894 lbmass	1.788 lbmass	100007735	Door Component Hinge	200071108
4	0.304 lbmass	0.608 lbmass	100007735	Door Component Hinge-Secondary	200071132
5	6.016 lbmass	36.093 lbmass	100007821	Door Component Steel Stiffener, Plate	200061811
6	1	1	200095591	Slam Latch Spacer Plate - 1/2" Thick, Steel	200095591
7	0.504 lbmass	0.504 lbmass	100007734	Slam Latch Retainer	200085963
8	0.029 lbmass	0.058 lbmass	100007734	Hinge Doubler Coupling Plate	200092484
9	1	2	100007644	LEAF PULL HANDLE A36 3/8IN DIAMETER	100007644
10	1	2	100007641	FRAME LIFTING BRACKET	100007641
11	1	2	100007646	HANDLE RETAINER STL	100007646

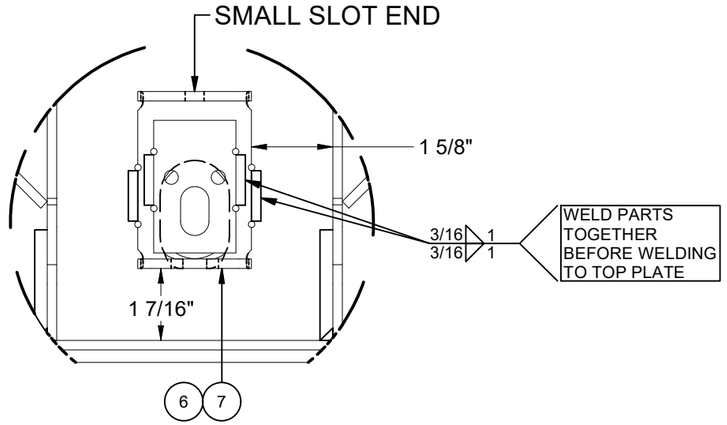

DETAIL A

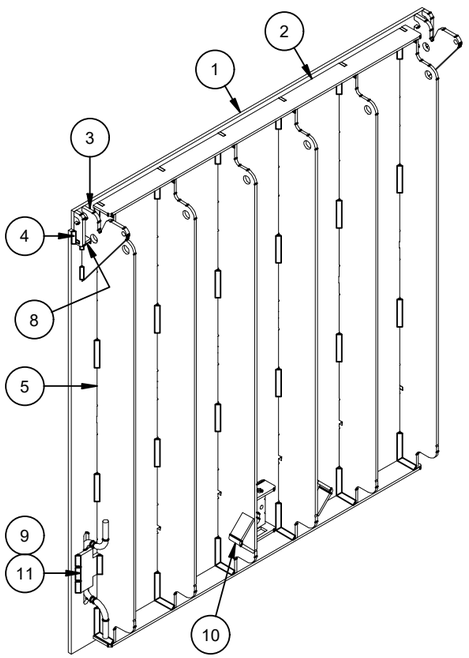

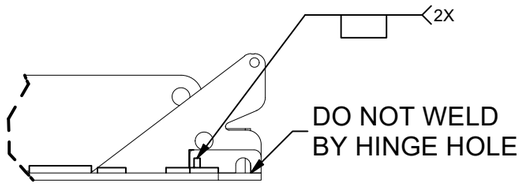

VIEW B-B
SCALE 3/16

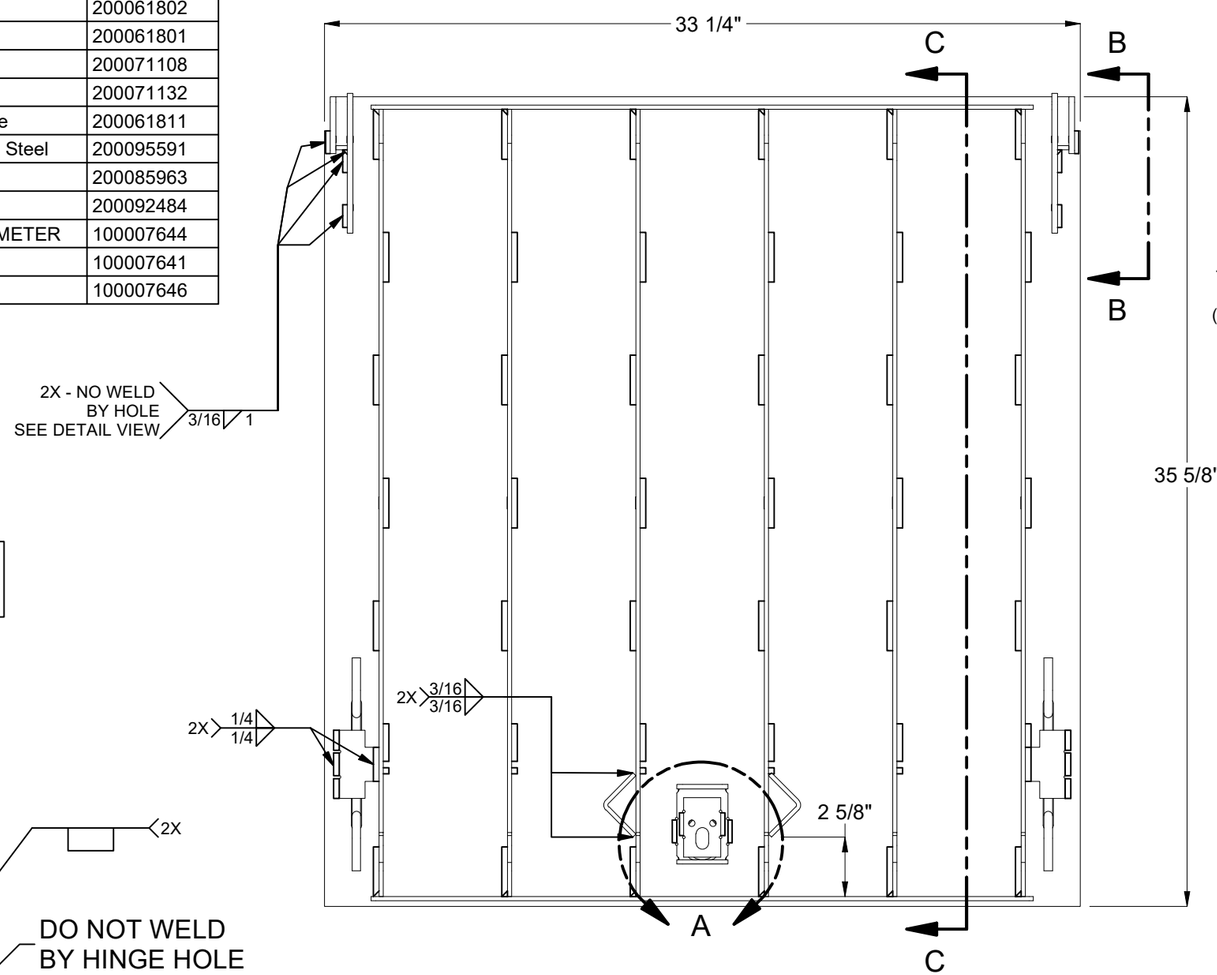

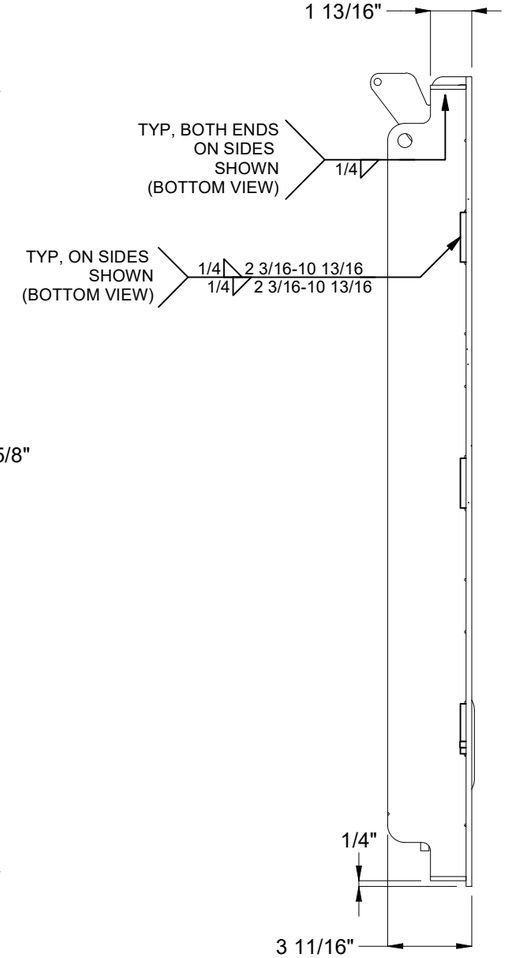

SECTION C-C

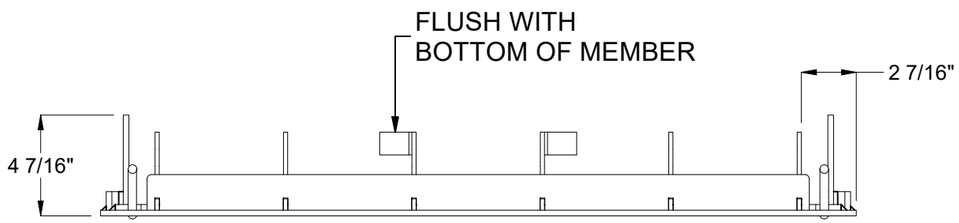

MATERIAL FINISH: Galvanized	Infrastructure JENSEN 527 Dunn Circle, Sparks, NV 89431 775-352-2716 FAX: 755-358-8127 *JENSENMETALTECH.COM*	©2026 Jensen Infrastructure - All rights reserved. All materials appearing as Jensen Infrastructure documents and the like are proprietary work product and are protected under U.S. copyright and other laws. Unless in conjunction with business conducted with Jensen Infrastructure , any use of Jensen Infrastructure work product without express, written consent is prohibited, and recipient is prohibited from distributing any and all work product to non-approved third parties under penalty of civil action. This product shall only be produced in a Jensen Infrastructure facility.	PART NUMBER & DESCRIPTION: 200061797 DAS1-SD-3333-HF4-DP-G-BD-332 — REV: H-1-3
MATERIAL SURFACE: Diamond Plate			WEIGHT: 137.91 Lbs — DRAWN BY: R. Dohr — SHEET: 3
			CREATED: 3/28/2022 — MODIFIED: 2/26/2026

200061796.idw

BILL OF MATERIALS

ITEM	ITEM QTY	QTY	PART NUMBER	DESCRIPTION	PART NAME
1	1	15.695 lbmass	100007734	Frame Component Steel Frame Side Left, Cast In	200099058
2	1	13.975 lbmass	100007734	Frame Component Steel Frame End, Cast In	200099057
3	1	15.695 lbmass	100007734	Frame Component Steel Frame Side Right, Cast In	200099054
4	1	14.740 lbmass	100007734	Frame Component Steel Frame Front, Cast In	200099055
5	1	0.277 lbmass	100007734	SLAM LATCH CATCH FOR 2" FRAMES - PNW	200099056
6	1	1.857 lbmass	100007734	NAME PLATE FRAME ANGLE (FOR 2" FRAMES)	200087678
7	2	1.719 lbmass	100007734	Frame Component Steel Skirt Extension	200099053
8	10	10	100007889	Anchor Weld Stud - H4L - 0.5" - A29/A108 - 2.125"	100007895
9	4	4	100007728	NUT SELF-CLINCH 1/2-13 S-0813-1 RAW	100007728
10	4	4	100007641	FRAME LIFTING BRACKET	100007641

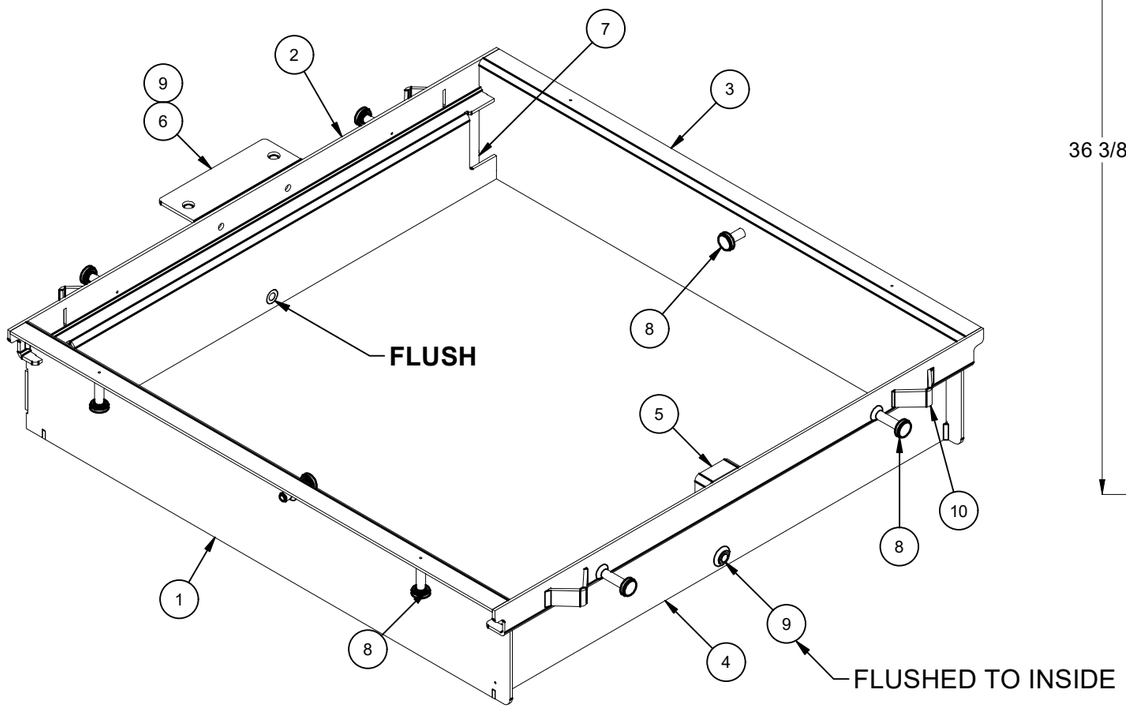

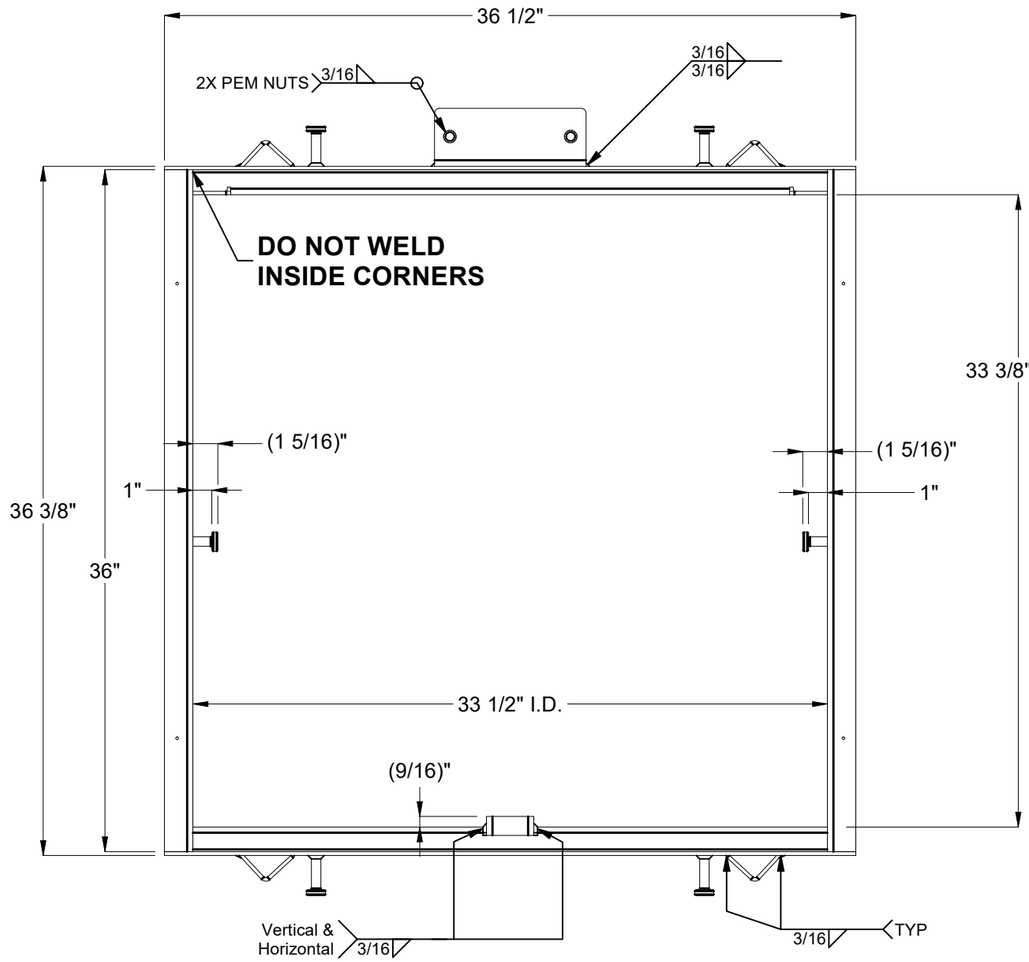

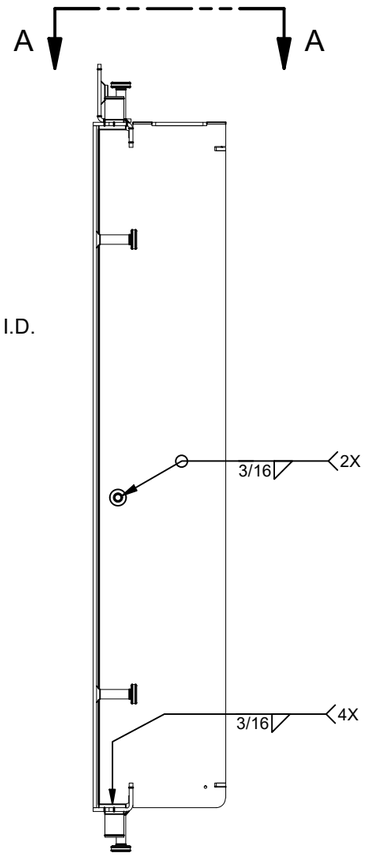

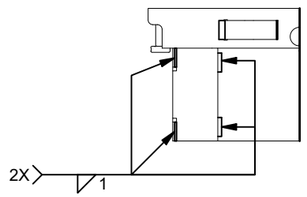

VIEW A-A
FRAME POCKETS
SCALE 1/8

200061796.idw

MATERIAL FINISH: Galvanized	Infrastructure JENSEN 527 Dunn Circle, Sparks, NV 89431 775-352-2716 FAX: 755-358-8127 *JENSENMETALTECH.COM*	PART NUMBER & DESCRIPTION: 200099069 FAS-3333-CH-G-SL-OH02-PNW-332	REV: H-1-3
MATERIAL SURFACE: Smooth		WEIGHT: 66.87 Lbs DRAWN BY: R. Dohr	SHEET: 4
		CREATED: 3/28/2022 MODIFIED: 2/26/2026	

©2026 Jensen Infrastructure - All rights reserved.
All materials appearing as Jensen Infrastructure documents and the like are proprietary work product and are protected under U.S. copyright and other laws. Unless in conjunction with business conducted with Jensen Infrastructure , any use of Jensen Infrastructure work product without express, written consent is prohibited, and recipient is prohibited from distributing any and all work product to non-approved third parties under penalty of civil action.
This product shall only be produced in a Jensen Infrastructure facility.

BURN LIST - BOM

PART NAME	ITEM QTY	QTY	DESCRIPTION	STOCK NUMBER	MATERIAL	MASS	SHEET
200061801	2	4.764 lbmass	Door Component Steel Side Bar	100007734	STL ASTM A36 SM-HRPO 60X120 RAW .1875	2.382 lbmass	06
200061802	1	91.757 lbmass	Door Component Steel Plate, Top	100007736	SHT STL CQ DP RAW .25 - 36 KSI YIELD	91.799 lbmass	07
200061811	6	36.093 lbmass	Door Component Steel Stiffener, Plate	100007821	SHT STL GR80 SM-HRPO RAW .1875	6.008 lbmass	08
200071108	2	1.788 lbmass	Door Component Hinge	100007735	STL ASTM A36 SM-HRPO RAW .250	0.889 lbmass	09
200071132	2	0.608 lbmass	Door Component Hinge-Secondary	100007735	STL ASTM A36 SM-HRPO RAW .250	0.123 lbmass	10
200085963	1	0.504 lbmass	Slam Latch Retainer	100007734	STL ASTM A36 SM-HRPO 60X120 RAW .1875	0.504 lbmass	11
200087678	1	1.857 lbmass	NAME PLATE FRAME ANGLE (FOR 2" FRAMES)	100007734	STL ASTM A36 SM-HRPO 60X120 RAW .1875	1.857 lbmass	12
200092484	2	0.058 lbmass	Hinge Doubler Coupling Plate	100007734	STL ASTM A36 SM-HRPO 60X120 RAW .1875	0.029 lbmass	13
200099053	2	1.719 lbmass	Frame Component Steel Skirt Extension	100007734	STL ASTM A36 SM-HRPO 60X120 RAW .1875	0.860 lbmass	14
200099054	1	15.695 lbmass	Frame Component Steel Frame Side Right, Cast In	100007734	STL ASTM A36 SM-HRPO 60X120 RAW .1875	15.695 lbmass	15
200099055	1	14.740 lbmass	Frame Component Steel Frame Front, Cast In	100007734	STL ASTM A36 SM-HRPO 60X120 RAW .1875	14.740 lbmass	16
200099056	1	0.277 lbmass	SLAM LATCH CATCH FOR 2" FRAMES - PNW	100007734	STL ASTM A36 SM-HRPO 60X120 RAW .1875	0.277 lbmass	17
200099057	1	13.975 lbmass	Frame Component Steel Frame End, Cast In	100007734	STL ASTM A36 SM-HRPO 60X120 RAW .1875	13.975 lbmass	18
200099058	1	15.695 lbmass	Frame Component Steel Frame Side Left, Cast In	100007734	STL ASTM A36 SM-HRPO 60X120 RAW .1875	15.695 lbmass	19

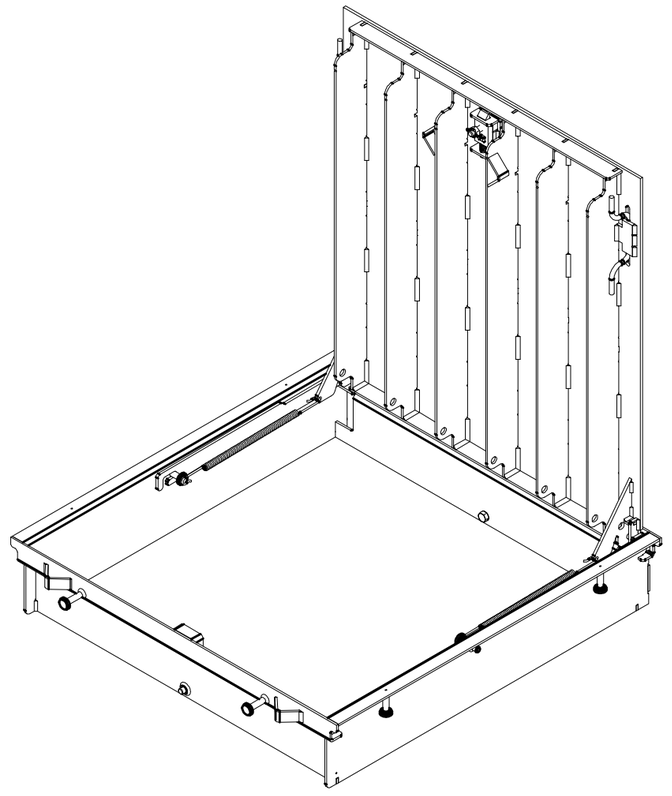

200061796.idw

MATERIAL FINISH: Galvanized

MATERIAL SURFACE: Diamond Plate

Infrastructure
JENSEN
527 Dunn Circle, Sparks, NV 89431
775-352-2716 FAX: 755-358-8127
JENSENMETALTECH.COM

©2026 Jensen Infrastructure - All rights reserved.
All materials appearing as Jensen Infrastructure documents and the like are proprietary work product and are protected under U.S. copyright and other laws. Unless in conjunction with business conducted with Jensen Infrastructure , any use of Jensen Infrastructure work product without express, written consent is prohibited, and recipient is prohibited from distributing any and all work product to non-approved third parties under penalty of civil action.
This product shall only be produced in a Jensen Infrastructure facility.

PART NUMBER & DESCRIPTION: 200061796
CAS1-3333-CHF4-DP-G-BD-GR-SL-PNW-OH07-332

REV: H-1-3

WEIGHT: 212.79 Lbs

DRAWN BY: R. Dohr

CREATED: 3/28/2022

MODIFIED: 2/26/2026

SHEET: 5

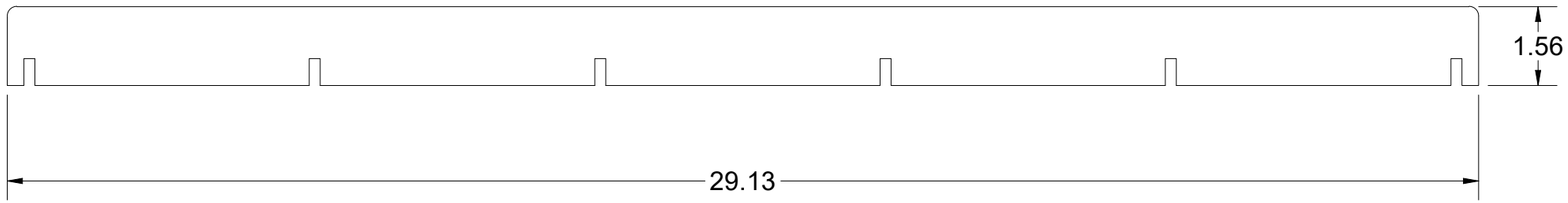



BEND TABLE			
BEND RADIUS	V-OPENING	BEND ANGLE	BEND DEDUCTION
-	-	- 0	-

MATERIAL IFS: 100007734

MATERIAL THK: 0.1875

MAT DESCRIPTION: STL ASTM A36 SM-HRPO 60X120 RAW .1875

Infrastructure
JENSEN
527 Dunn Circle, Sparks, NV 89431
775-352-2716 FAX: 755-358-8127
JENSENMETALTECH.COM

©2026 Jensen Infrastructure - All rights reserved.
All materials appearing as Jensen Infrastructure documents and the like are proprietary work product and are protected under U.S. copyright and other laws. Unless in conjunction with business conducted with Jensen Infrastructure , any use of Jensen Infrastructure work product without express, written consent is prohibited, and recipient is prohibited from distributing any and all work product to non-approved third parties under penalty of civil action.
This product shall only be produced in a Jensen Infrastructure facility.

NAME & DESCRIPTION: 200061801
Door Component Steel Side Bar

REV: H-1-3

WEIGHT: 2.382 lbmass

DRAWN BY: R. Dohr

CREATED: 3/28/2022

MODIFIED: 2/26/2026

SHEET: 6 OF 19

200061796.idw

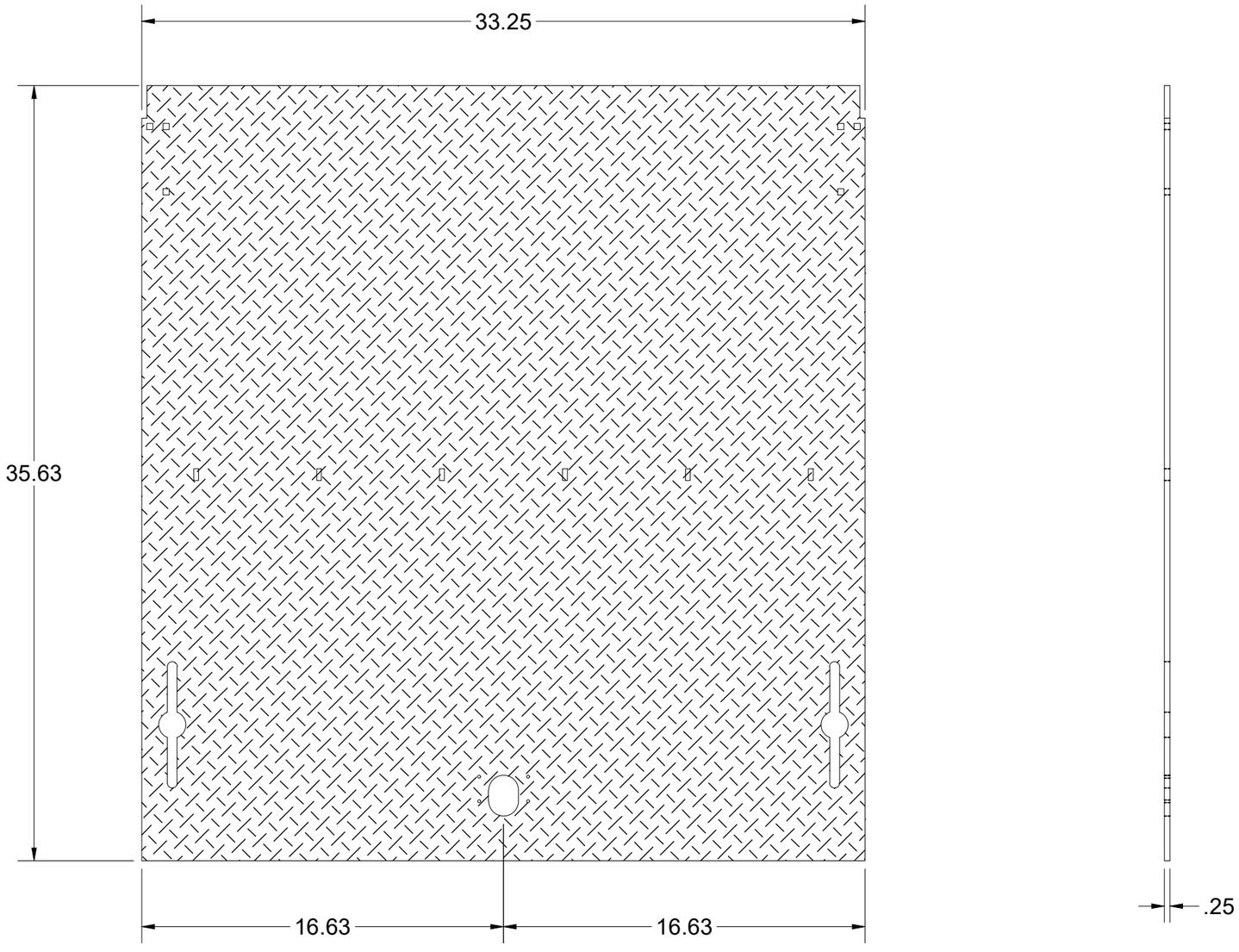

200061796.idw

BEND TABLE				MATERIAL IFS: 100007736
BEND RADIUS	V-OPENING	BEND ANGLE	BEND DEDUCTION	MATERIAL THK: 0.25
-	-	- 0	-	MAT DESCRIPTION: SHT STL CQ DP RAW .25 - 36 KSI YIELD

Infrastructure
JENSEN
527 Dunn Circle, Sparks, NV 89431
775-352-2716 FAX: 755-358-8127
JENSENMETALTECH.COM

©2026 Jensen Infrastructure - All rights reserved.
All materials appearing as Jensen Infrastructure documents and the like are proprietary work product and are protected under U.S. copyright and other laws. Unless in conjunction with business conducted with Jensen Infrastructure , any use of Jensen Infrastructure work product without express, written consent is prohibited, and recipient is prohibited from distributing any and all work product to non-approved third parties under penalty of civil action.
This product shall only be produced in a Jensen Infrastructure facility.

NAME & DESCRIPTION: 200061802 Door Component Steel Plate, Top		REV: H-1-3
WEIGHT: 91.799 lbmass	DRAWN BY: R. Dohr	SHEET: 7 OF 19
CREATED: 3/28/2022	MODIFIED: 2/26/2026	

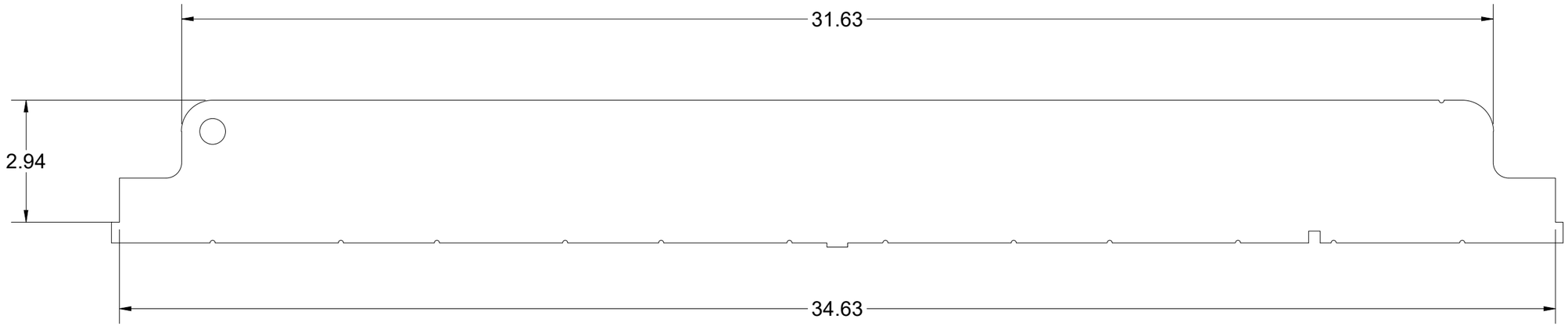

BEND TABLE				MATERIAL IFS: 100007821
BEND RADIUS	V-OPENING	BEND ANGLE	BEND DEDUCTION	MATERIAL THK: 0.1875
-	-	- 0	-	MAT DESCRIPTION: SHT STL GR80 SM-HRPO RAW .1875

Infrastructure
JENSEN
527 Dunn Circle, Sparks, NV 89431
775-352-2716 FAX: 755-358-8127
JENSENMETALTECH.COM

©2026 Jensen Infrastructure - All rights reserved.
All materials appearing as Jensen Infrastructure documents and the like are proprietary work product and are protected under U.S. copyright and other laws. Unless in conjunction with business conducted with Jensen Infrastructure , any use of Jensen Infrastructure work product without express, written consent is prohibited, and recipient is prohibited from distributing any and all work product to non-approved third parties under penalty of civil action.
This product shall only be produced in a Jensen Infrastructure facility.

NAME & DESCRIPTION: 200061811 Door Component Steel Stiffener, Plate		REV: H-1-3
WEIGHT: 6.008 lbmass	DRAWN BY: R. Dohr	SHEET: 8 OF 19
CREATED: 3/28/2022	MODIFIED: 2/26/2026	

200061796.idw

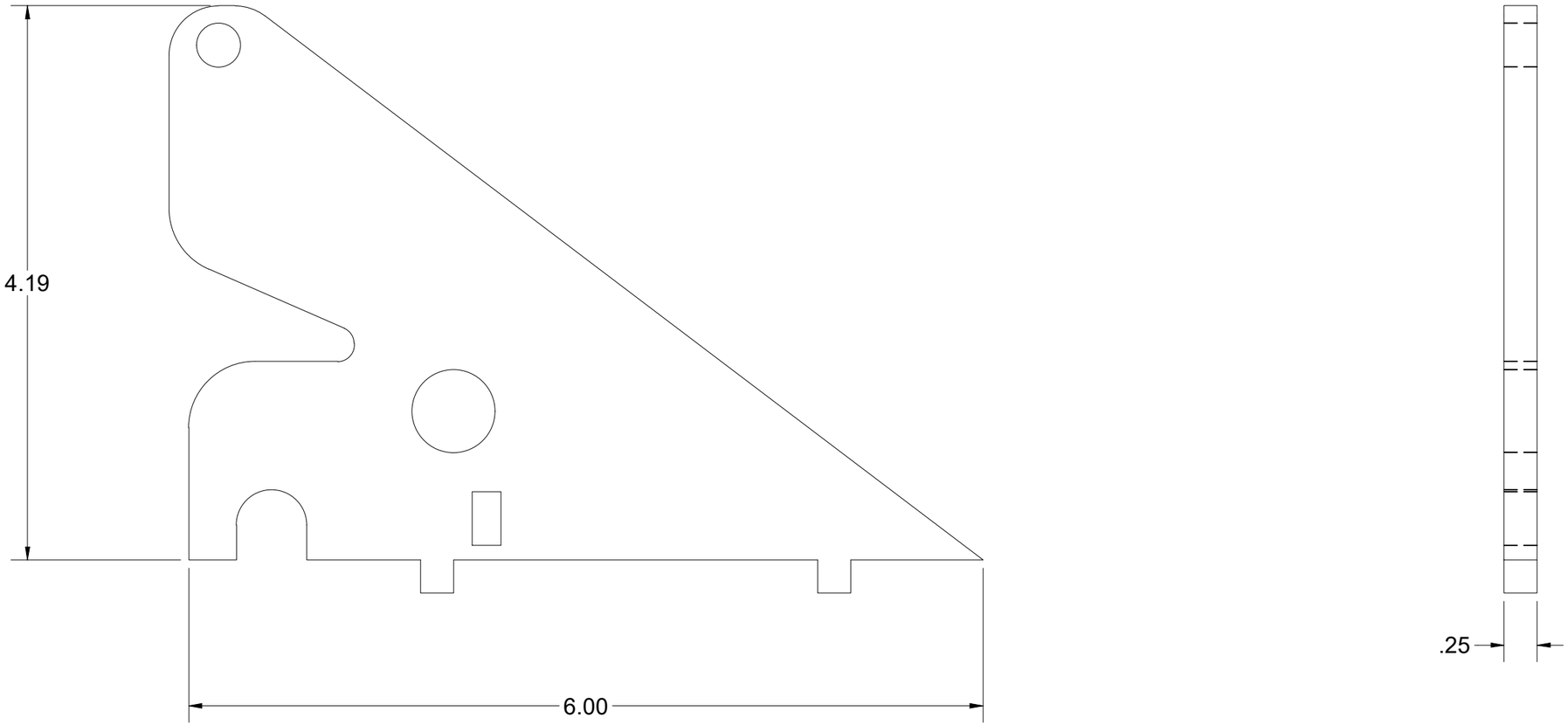

200061796.idw

BEND TABLE				MATERIAL IFS: 100007735
BEND RADIUS	V-OPENING	BEND ANGLE	BEND DEDUCTION	MATERIAL THK: 0.25
-	-	- 0	-	MAT DESCRIPTION: STL ASTM A36 SM-HRPO RAW .250

Infrastructure JENSEN
527 Dunn Circle, Sparks, NV 89431
775-352-2716 FAX: 755-358-8127
JENSENMETALTECH.COM

©2026 Jensen Infrastructure - All rights reserved.
All materials appearing as Jensen Infrastructure documents and the like are proprietary work product and are protected under U.S. copyright and other laws. Unless in conjunction with business conducted with Jensen Infrastructure , any use of Jensen Infrastructure work product without express, written consent is prohibited, and recipient is prohibited from distributing any and all work product to non-approved third parties under penalty of civil action.
This product shall only be produced in a Jensen Infrastructure facility.

NAME & DESCRIPTION:	200071108 Door Component Hinge	REV:
WEIGHT: 0.889 lbmass	DRAWN BY: R. Dohr	SHEET: 9 OF 19
CREATED: 3/28/2022	MODIFIED: 2/26/2026	

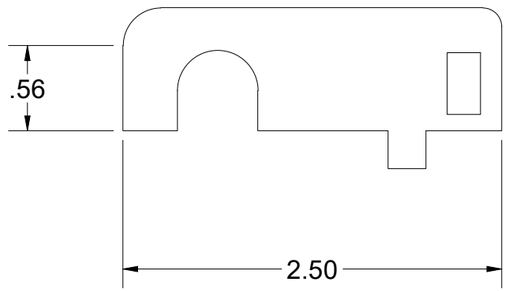

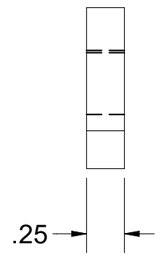

200061796.idw

BEND TABLE				MATERIAL IFS: 100007735
BEND RADIUS	V-OPENING	BEND ANGLE	BEND DEDUCTION	MATERIAL THK: 0.25
-	-	- 0	-	MAT DESCRIPTION: STL ASTM A36 SM-HRPO RAW .250

Infrastructure
JENSEN
527 Dunn Circle, Sparks, NV 89431
775-352-2716 FAX: 755-358-8127
JENSENMETALTECH.COM

©2026 Jensen Infrastructure - All rights reserved.
All materials appearing as Jensen Infrastructure documents and the like are proprietary work product and are protected under U.S. copyright and other laws. Unless in conjunction with business conducted with Jensen Infrastructure , any use of Jensen Infrastructure work product without express, written consent is prohibited, and recipient is prohibited from distributing any and all work product to non-approved third parties under penalty of civil action.
This product shall only be produced in a Jensen Infrastructure facility.

NAME & DESCRIPTION: 200071132 Door Component Hinge-Secondary		REV: H-1-3
WEIGHT: 0.123 lbmass	DRAWN BY: R. Dohr	SHEET: 10 OF 19
CREATED: 3/28/2022	MODIFIED: 2/26/2026	

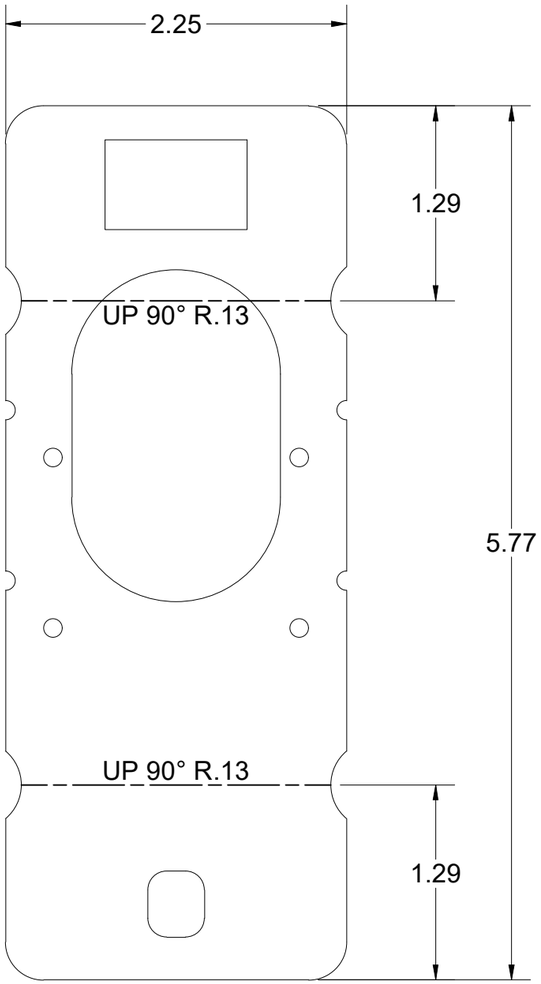

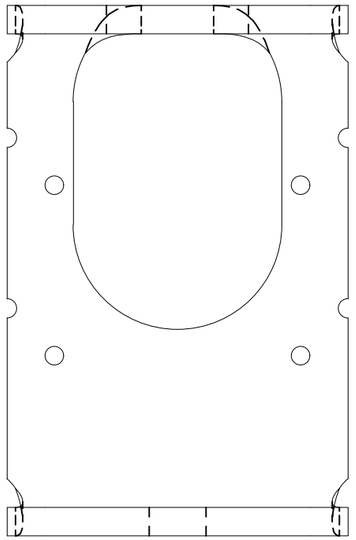

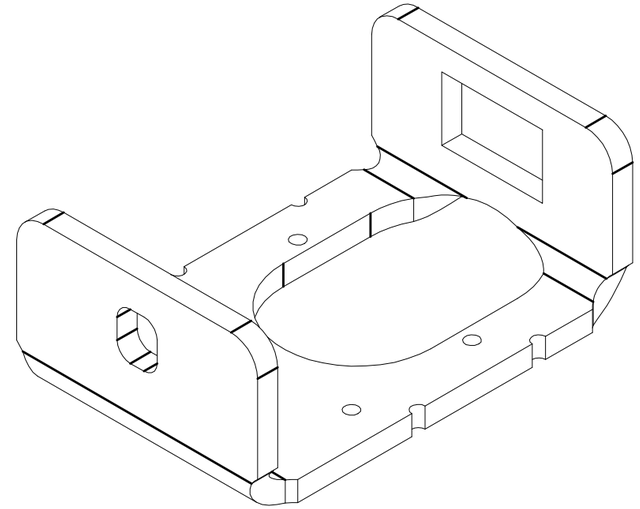

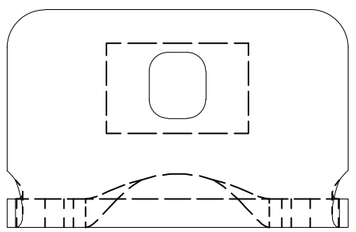

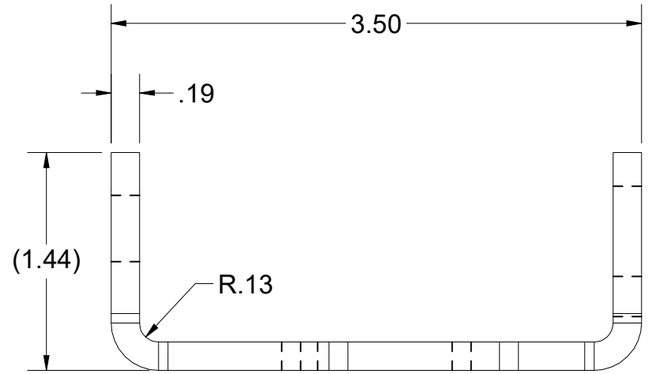

200061796.idw

BEND TABLE				MATERIAL IFS: 100007734
BEND RADIUS	V-OPENING	BEND ANGLE	BEND DEDUCTION	MATERIAL THK: 0.1875
0.125	0.75	90	0.304	MAT DESCRIPTION: STL ASTM A36 SM-HRPO 60X120 RAW .1875

Infrastructure
JENSEN
527 Dunn Circle, Sparks, NV 89431
775-352-2716 FAX: 755-358-8127
JENSENMETALTECH.COM

©2026 Jensen Infrastructure - All rights reserved.
All materials appearing as Jensen Infrastructure documents and the like are proprietary work product and are protected under U.S. copyright and other laws. Unless in conjunction with business conducted with Jensen Infrastructure , any use of Jensen Infrastructure work product without express, written consent is prohibited, and recipient is prohibited from distributing any and all work product to non-approved third parties under penalty of civil action.
This product shall only be produced in a Jensen Infrastructure facility.

NAME & DESCRIPTION:	200085963 Slam Latch Retainer	REV:	H-1-3
WEIGHT:	0.504 lbmass	DRAWN BY:	R. Dohr
CREATED:	3/28/2022	MODIFIED:	2/26/2026
		SHEET:	11 OF 19

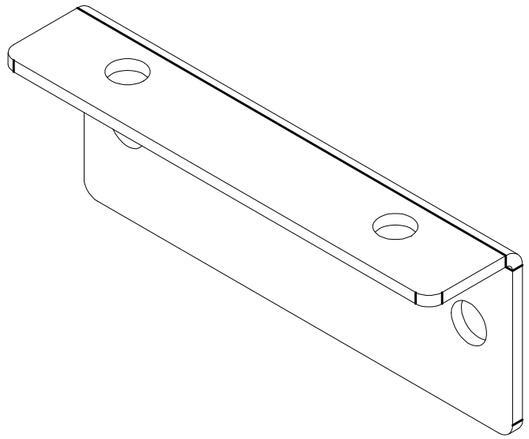

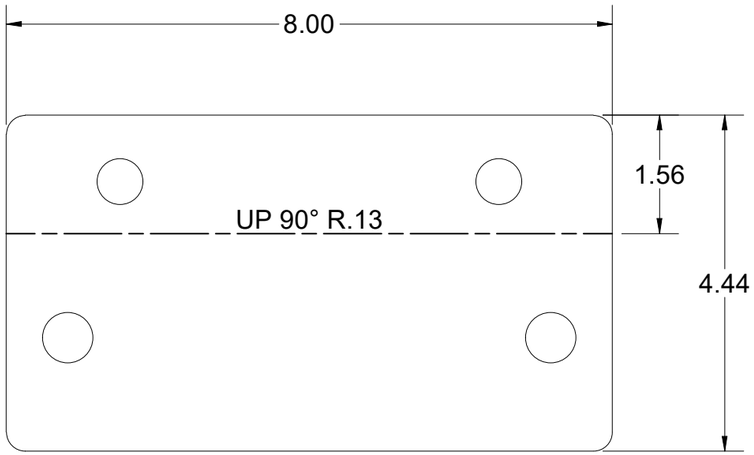

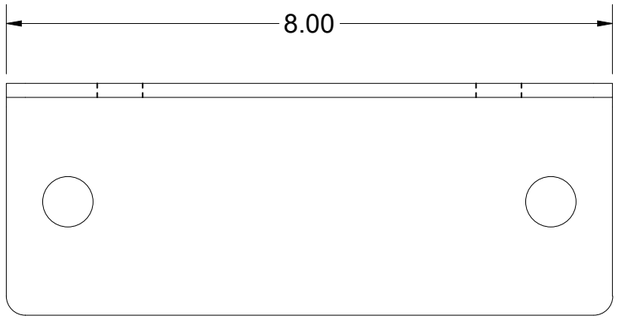

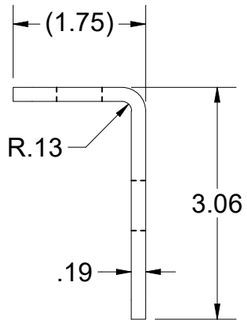

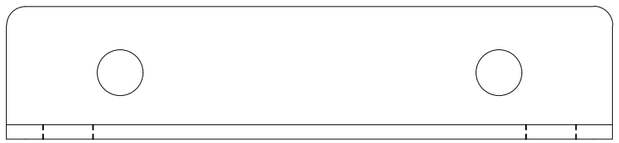

BEND TABLE				MATERIAL IFS: 100007734
BEND RADIUS	V-OPENING	BEND ANGLE	BEND DEDUCTION	MATERIAL THK: 0.1875
0.125	2	90	0.375	MAT DESCRIPTION: STL ASTM A36 SM-HRPO 60X120 RAW .1875

Infrastructure
JENSEN
527 Dunn Circle, Sparks, NV 89431
775-352-2716 FAX: 755-358-8127
JENSENMETALTECH.COM

©2026 Jensen Infrastructure - All rights reserved.
All materials appearing as Jensen Infrastructure documents and the like are proprietary work product and are protected under U.S. copyright and other laws. Unless in conjunction with business conducted with Jensen Infrastructure , any use of Jensen Infrastructure work product without express, written consent is prohibited, and recipient is prohibited from distributing any and all work product to non-approved third parties under penalty of civil action.
This product shall only be produced in a Jensen Infrastructure facility.

NAME & DESCRIPTION:		REV:
200087678 NAME PLATE FRAME ANGLE (FOR 2" FRAMES)		H-1-3
WEIGHT: 1.857 lbmass	DRAWN BY: R. Dohr	SHEET: 12 OF 19
CREATED: 3/28/2022	MODIFIED: 2/26/2026	

200061796.idw

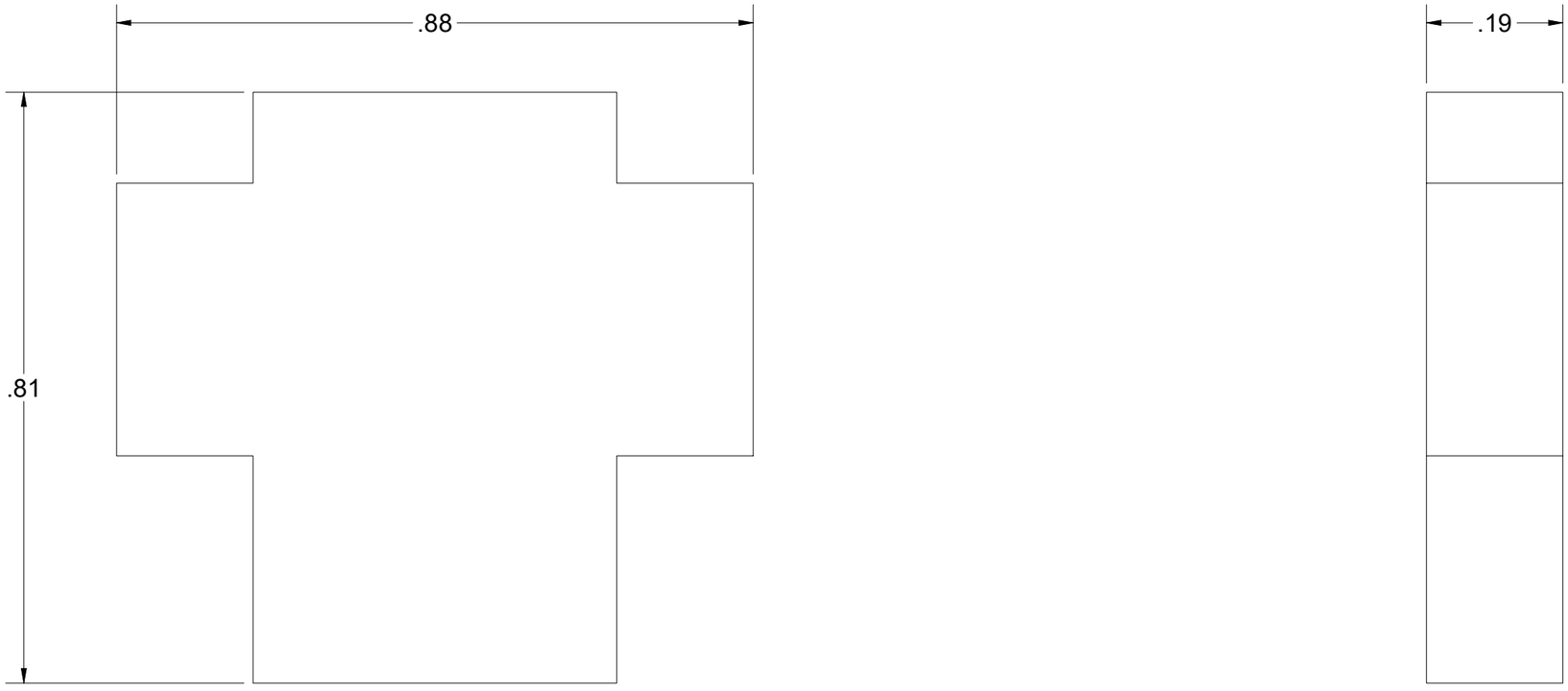

200061796.idw

BEND TABLE				MATERIAL IFS: 100007734
BEND RADIUS	V-OPENING	BEND ANGLE	BEND DEDUCTION	MATERIAL THK: 0.1875
-	-	-	-	MAT DESCRIPTION: STL ASTM A36 SM-HRPO 60X120 RAW .1875

Infrastructure
JENSEN
527 Dunn Circle, Sparks, NV 89431
775-352-2716 FAX: 755-358-8127
JENSENMETALTECH.COM

©2026 Jensen Infrastructure - All rights reserved.
All materials appearing as Jensen Infrastructure documents and the like are proprietary work product and are protected under U.S. copyright and other laws. Unless in conjunction with business conducted with Jensen Infrastructure , any use of Jensen Infrastructure work product without express, written consent is prohibited, and recipient is prohibited from distributing any and all work product to non-approved third parties under penalty of civil action.
This product shall only be produced in a Jensen Infrastructure facility.

NAME & DESCRIPTION:	200092484 Hinge Doubler Coupling Plate	REV:
WEIGHT: 0.029 lbmass	DRAWN BY: R. Dohr	SHEET: 13 OF 19
CREATED: 3/28/2022	MODIFIED: 2/26/2026	

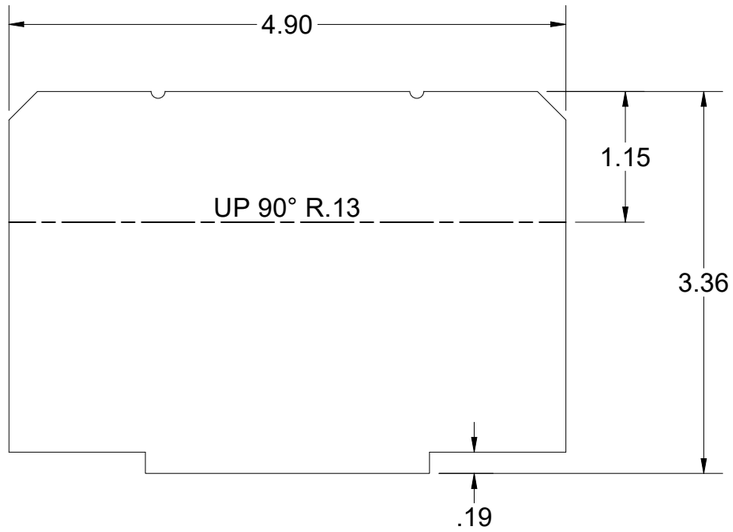

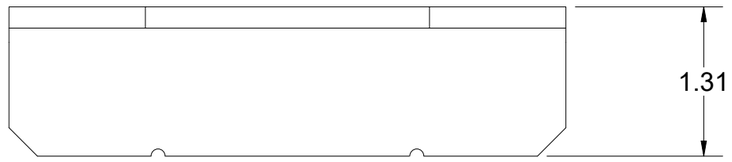

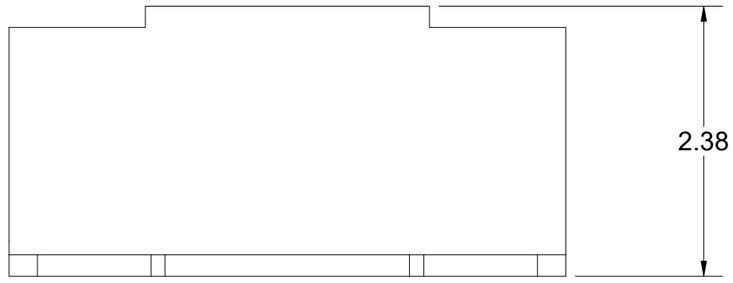

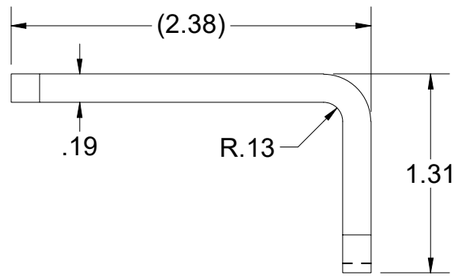

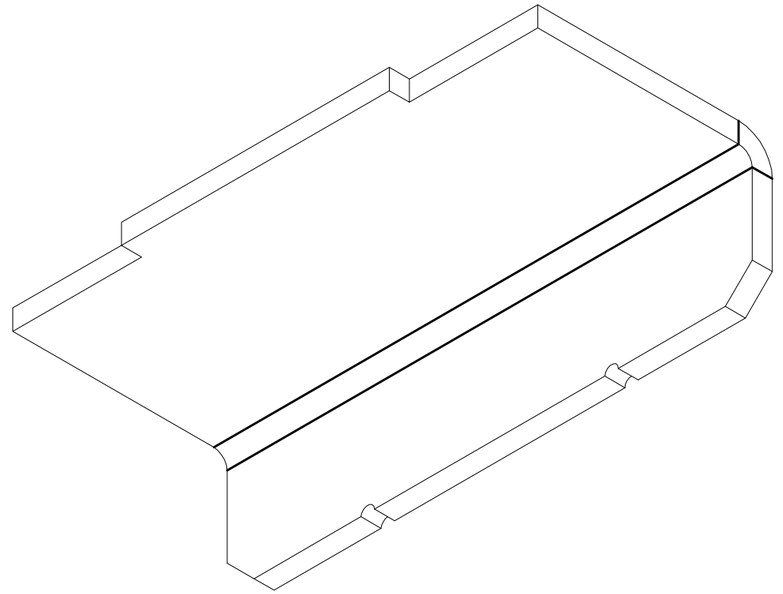

200061796.idw

BEND TABLE				MATERIAL IFS: 100007734
BEND RADIUS	V-OPENING	BEND ANGLE	BEND DEDUCTION	MATERIAL THK: 0.1875
0.125	1	90	0.325	MAT DESCRIPTION: STL ASTM A36 SM-HRPO 60X120 RAW .1875

Infrastructure JENSEN
527 Dunn Circle, Sparks, NV 89431
775-352-2716 FAX: 755-358-8127
JENSENMETALTECH.COM

©2026 Jensen Infrastructure - All rights reserved.
All materials appearing as Jensen Infrastructure documents and the like are proprietary work product and are protected under U.S. copyright and other laws. Unless in conjunction with business conducted with Jensen Infrastructure , any use of Jensen Infrastructure work product without express, written consent is prohibited, and recipient is prohibited from distributing any and all work product to non-approved third parties under penalty of civil action.
This product shall only be produced in a Jensen Infrastructure facility.

NAME & DESCRIPTION:	200099053 Frame Component Steel Skirt Extension	REV:	H-1-3
WEIGHT:	0.860 lbmass	DRAWN BY:	R. Dohr
CREATED:	3/28/2022	MODIFIED:	2/26/2026
		SHEET:	14 OF 19

NOT SYMMETRICAL

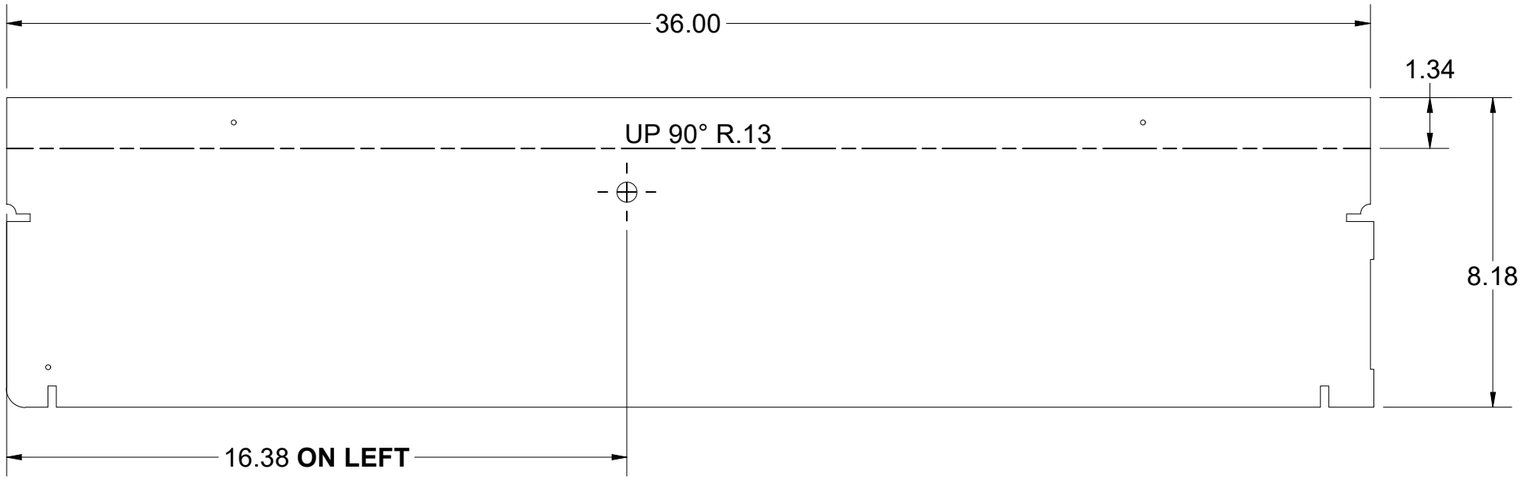

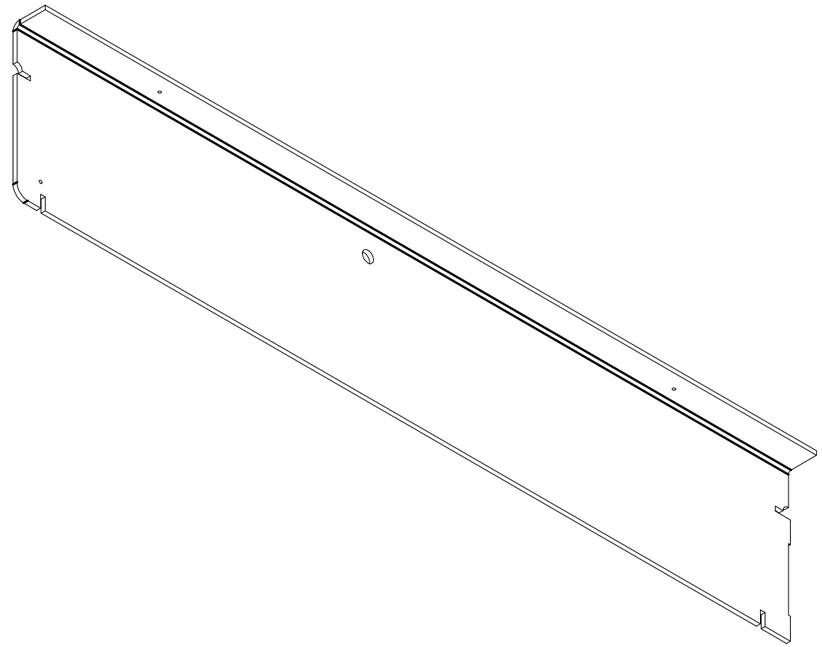

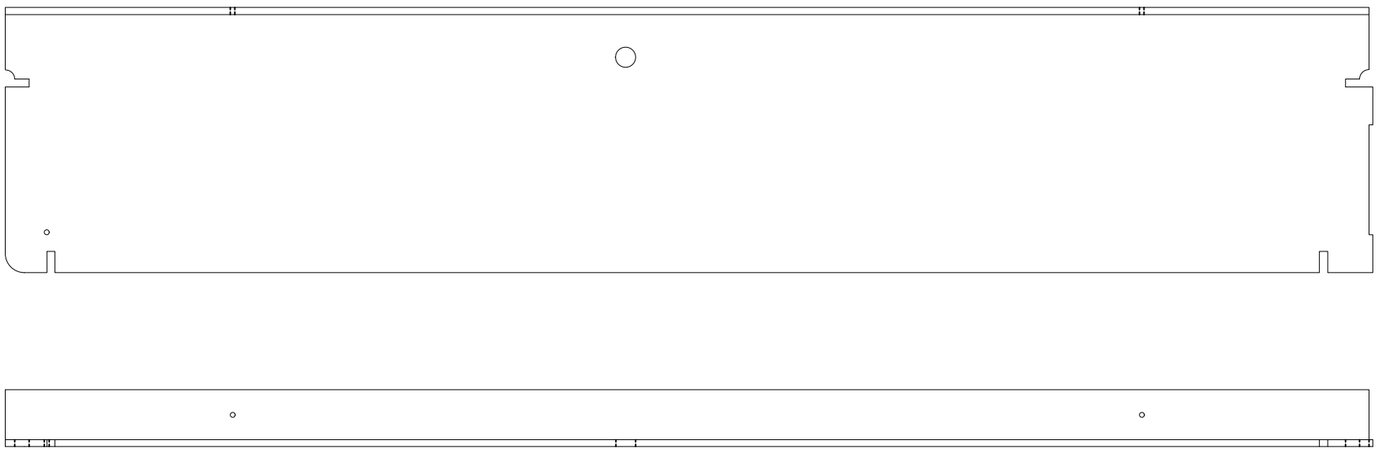

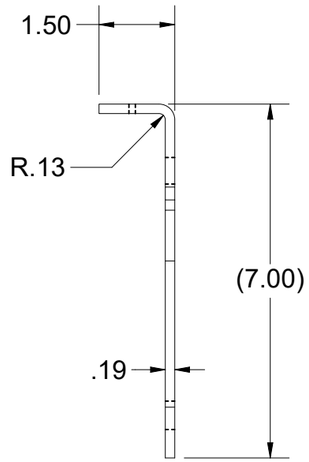

BEND TABLE			
BEND RADIUS	V-OPENING	BEND ANGLE	BEND DEDUCTION
0.125	1	90	0.325

MATERIAL IFS: 100007734

MATERIAL THK: 0.1875

MAT DESCRIPTION: STL ASTM A36 SM-HRPO 60X120 RAW .1875

Infrastructure JENSEN

527 Dunn Circle, Sparks, NV 89431
775-352-2716 FAX: 755-358-8127
JENSENMETALTECH.COM

©2026 Jensen Infrastructure - All rights reserved.
All materials appearing as Jensen Infrastructure documents and the like are proprietary work product and are protected under U.S. copyright and other laws. Unless in conjunction with business conducted with Jensen Infrastructure , any use of Jensen Infrastructure work product without express, written consent is prohibited, and recipient is prohibited from distributing any and all work product to non-approved third parties under penalty of civil action.
This product shall only be produced in a Jensen Infrastructure facility.

NAME & DESCRIPTION: 200099054 — Frame Component Steel Frame Side Right, Cast In

REV: H-1-3

WEIGHT: 15.695 lbmass

DRAWN BY: R. Dohr

CREATED: 3/28/2022

MODIFIED: 2/26/2026

SHEET: 15 OF 19

200061796.idw

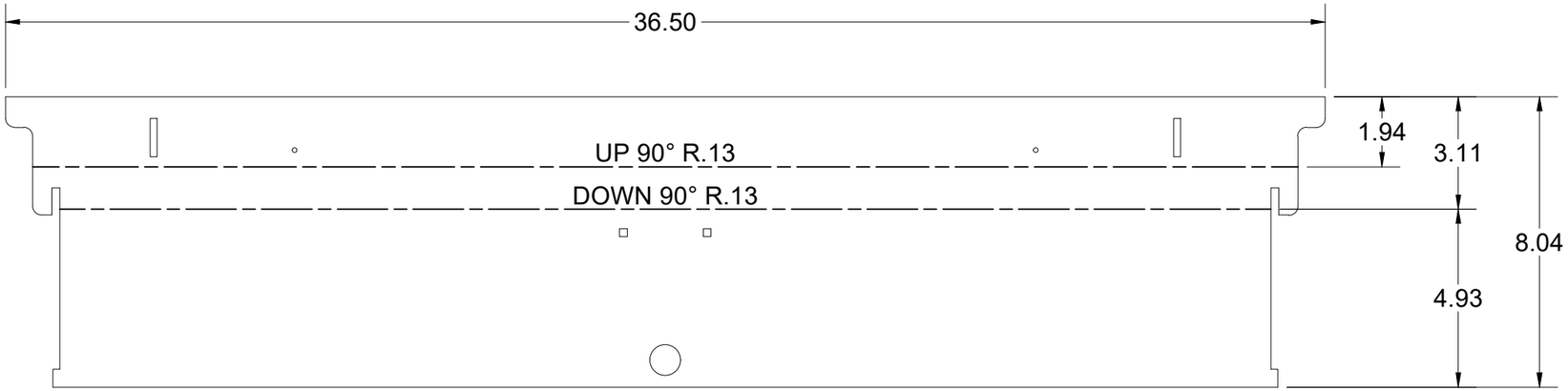

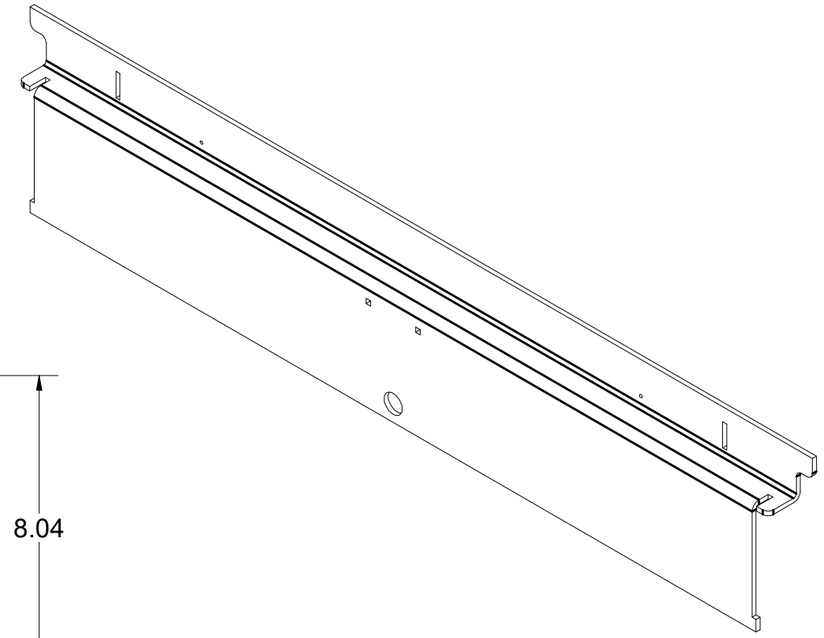

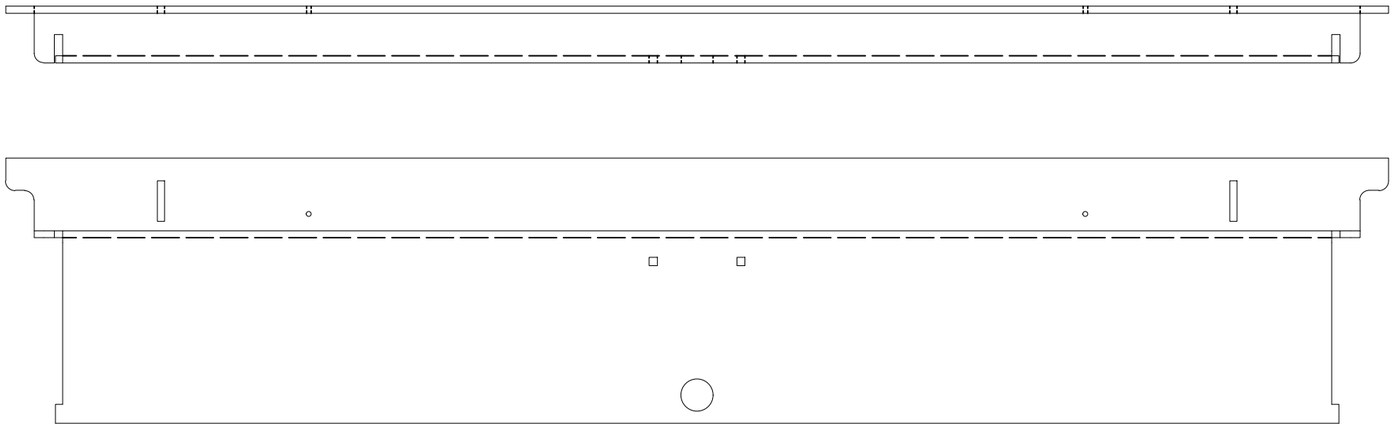

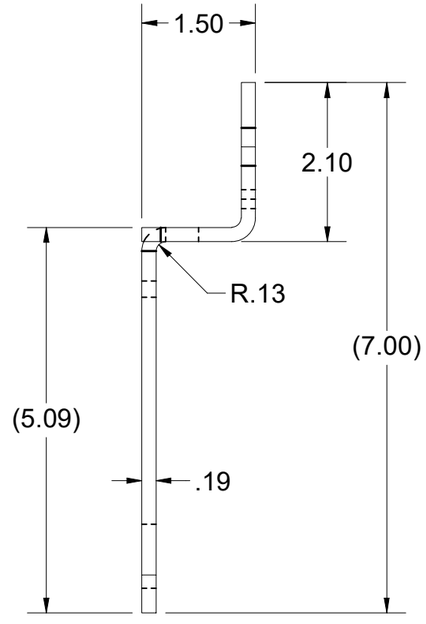

BEND TABLE			
BEND RADIUS	V-OPENING	BEND ANGLE	BEND DEDUCTION
0.125	1	90	0.325

MATERIAL IFS: 100007734

MATERIAL THK: 0.1875

MAT DESCRIPTION: STL ASTM A36 SM-HRPO 60X120 RAW .1875

Infrastructure JENSEN
527 Dunn Circle, Sparks, NV 89431
775-352-2716 FAX: 755-358-8127
JENSENMETALTECH.COM

©2026 Jensen Infrastructure - All rights reserved.
All materials appearing as Jensen Infrastructure documents and the like are proprietary work product and are protected under U.S. copyright and other laws. Unless in conjunction with business conducted with Jensen Infrastructure , any use of Jensen Infrastructure work product without express, written consent is prohibited, and recipient is prohibited from distributing any and all work product to non-approved third parties under penalty of civil action.
This product shall only be produced in a Jensen Infrastructure facility.

NAME & DESCRIPTION: 200099055
Frame Component Steel Frame Front, Cast In

REV: H-1-3

WEIGHT: 14.740 lbmass

DRAWN BY: R. Dohr

CREATED: 3/28/2022

MODIFIED: 2/26/2026

SHEET: 16 OF 19

200061796.idw

SYMMETRICAL

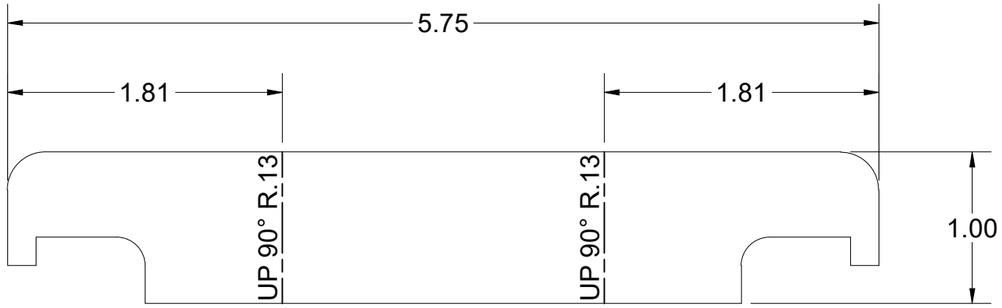



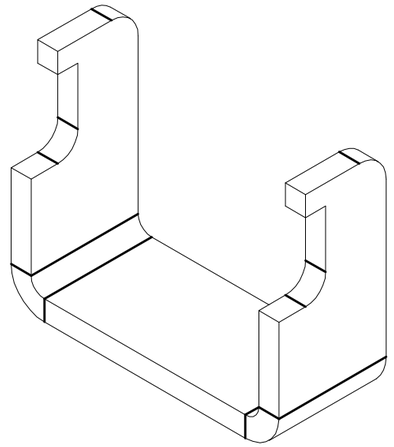

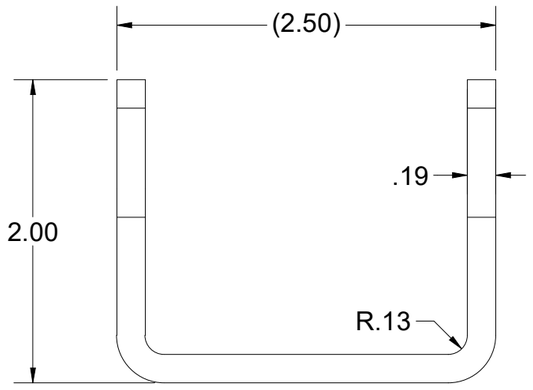

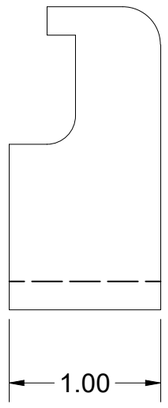

BEND TABLE				MATERIAL IFS: 100007734
BEND RADIUS	V-OPENING	BEND ANGLE	BEND DEDUCTION	MATERIAL THK: 0.1875
0.125	2	90	0.375	MAT DESCRIPTION: STL ASTM A36 SM-HRPO 60X120 RAW .1875

Infrastructure JENSEN
527 Dunn Circle, Sparks, NV 89431
775-352-2716 FAX: 755-358-8127
JENSENMETALTECH.COM

©2026 Jensen Infrastructure - All rights reserved.
All materials appearing as Jensen Infrastructure documents and the like are proprietary work product and are protected under U.S. copyright and other laws. Unless in conjunction with business conducted with Jensen Infrastructure , any use of Jensen Infrastructure work product without express, written consent is prohibited, and recipient is prohibited from distributing any and all work product to non-approved third parties under penalty of civil action.
This product shall only be produced in a Jensen Infrastructure facility.

NAME & DESCRIPTION: 200099056 SLAM LATCH CATCH FOR 2" FRAMES - PNW		REV: H-1-3
WEIGHT: 0.277 lbmass	DRAWN BY: R. Dohr	SHEET: 17 OF 19
CREATED: 3/28/2022	MODIFIED: 2/26/2026	

200061796.idw

SYMMETRICAL

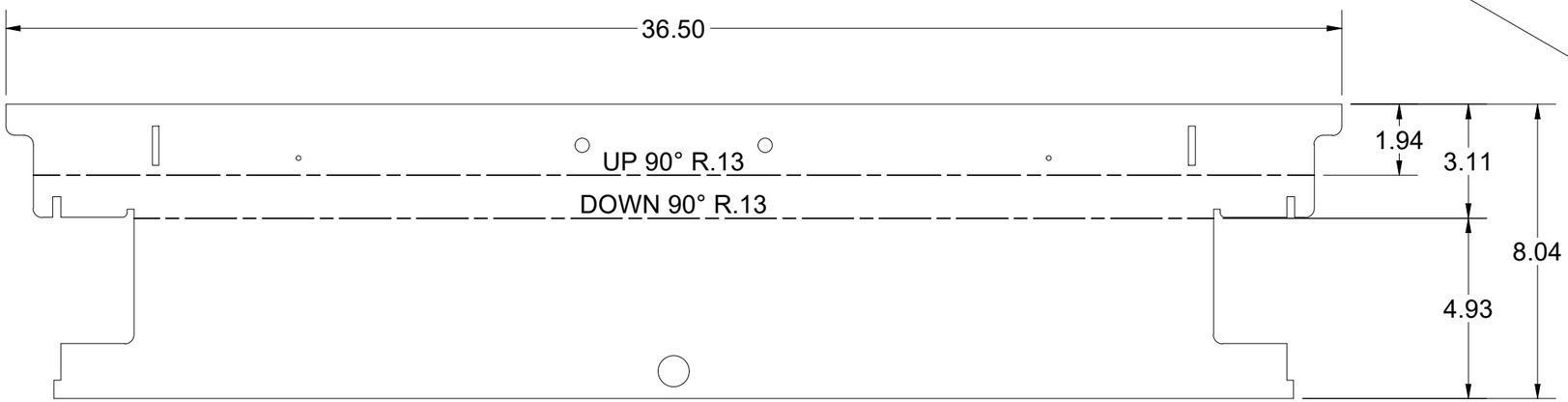

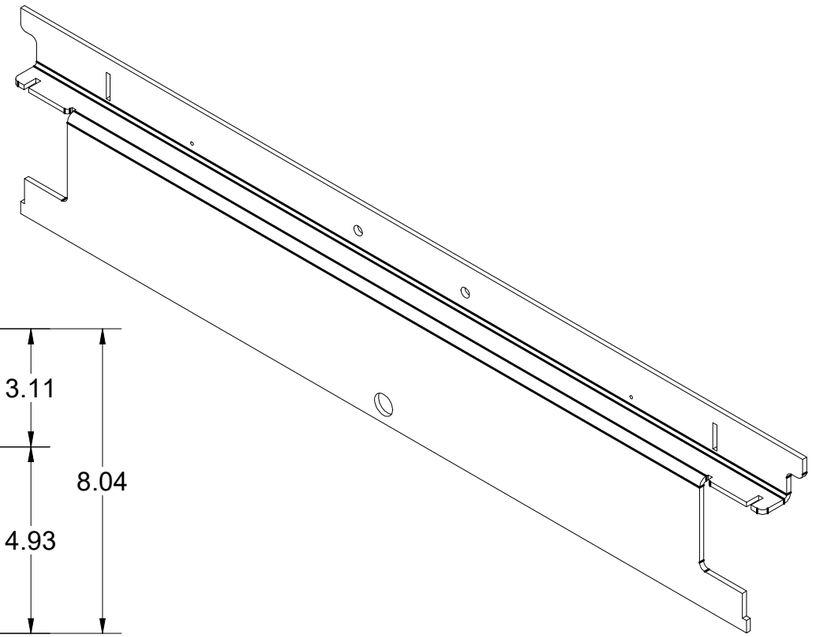

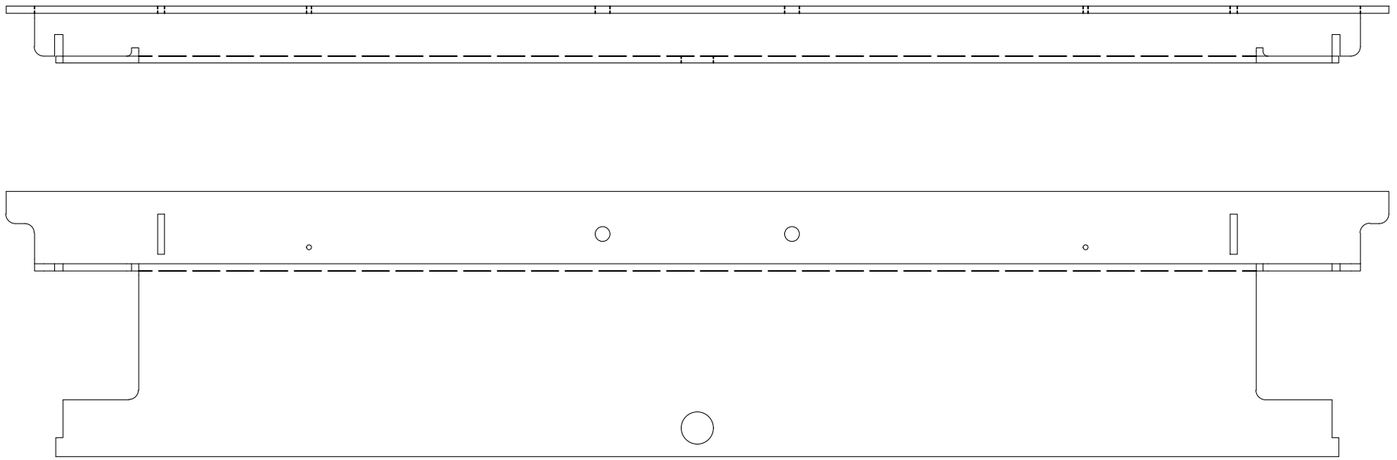

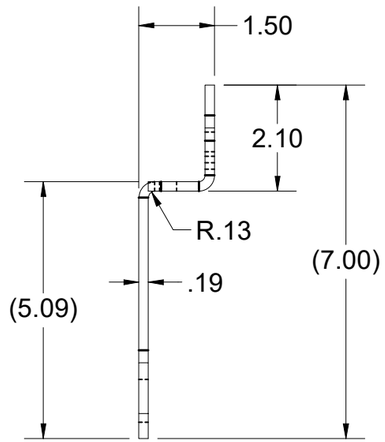

BEND TABLE				MATERIAL IFS: 100007734
BEND RADIUS	V-OPENING	BEND ANGLE	BEND DEDUCTION	MATERIAL THK: 0.1875
0.125	1	90	0.325	MAT DESCRIPTION: STL ASTM A36 SM-HRPO 60X120 RAW .1875

Infrastructure JENSEN
527 Dunn Circle, Sparks, NV 89431
775-352-2716 FAX: 755-358-8127
JENSENMETALTECH.COM

©2026 Jensen Infrastructure - All rights reserved. All materials appearing as Jensen Infrastructure documents and the like are proprietary work product and are protected under U.S. copyright and other laws. Unless in conjunction with business conducted with Jensen Infrastructure , any use of Jensen Infrastructure work product without express, written consent is prohibited, and recipient is prohibited from distributing any and all work product to non-approved third parties under penalty of civil action. This product shall only be produced in a Jensen Infrastructure facility.

NAME & DESCRIPTION: 200099057 Frame Component Steel Frame End, Cast In		REV: H-1-3
WEIGHT: 13.975 lbmass	DRAWN BY: R. Dohr	SHEET: 18 OF 19
CREATED: 3/28/2022	MODIFIED: 2/26/2026	

200061796.idw

NOT SYMMETRICAL

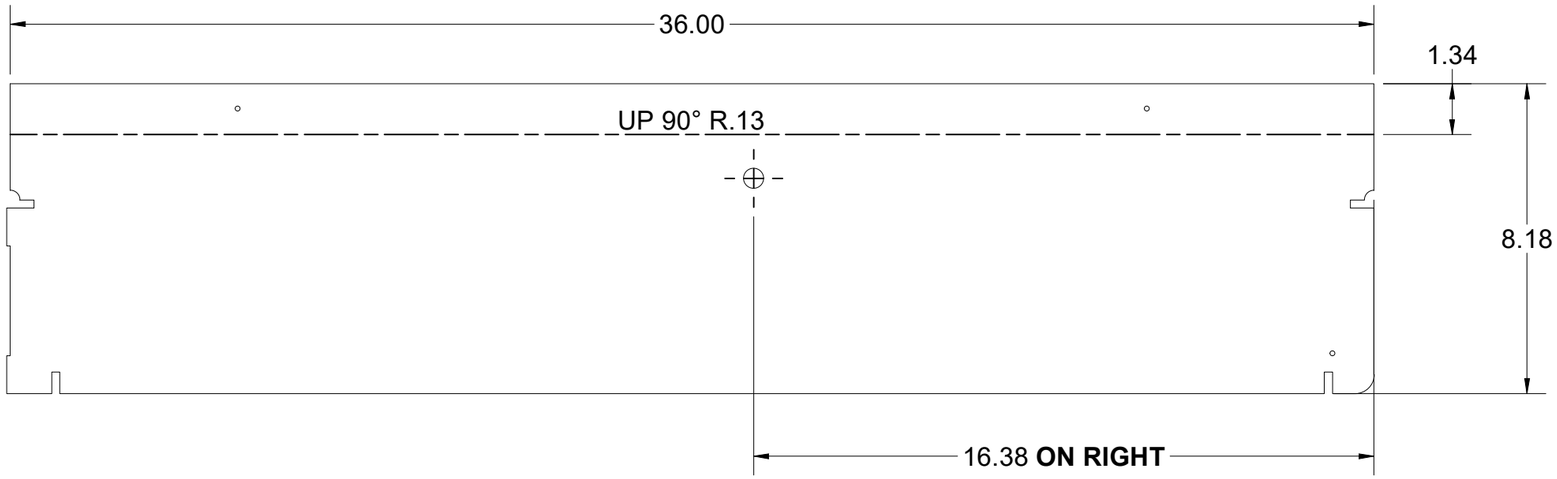

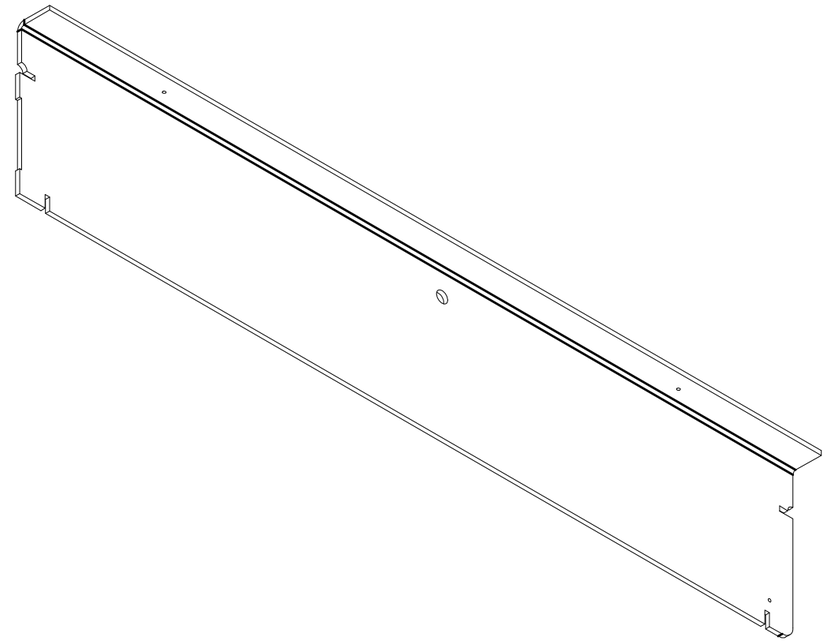

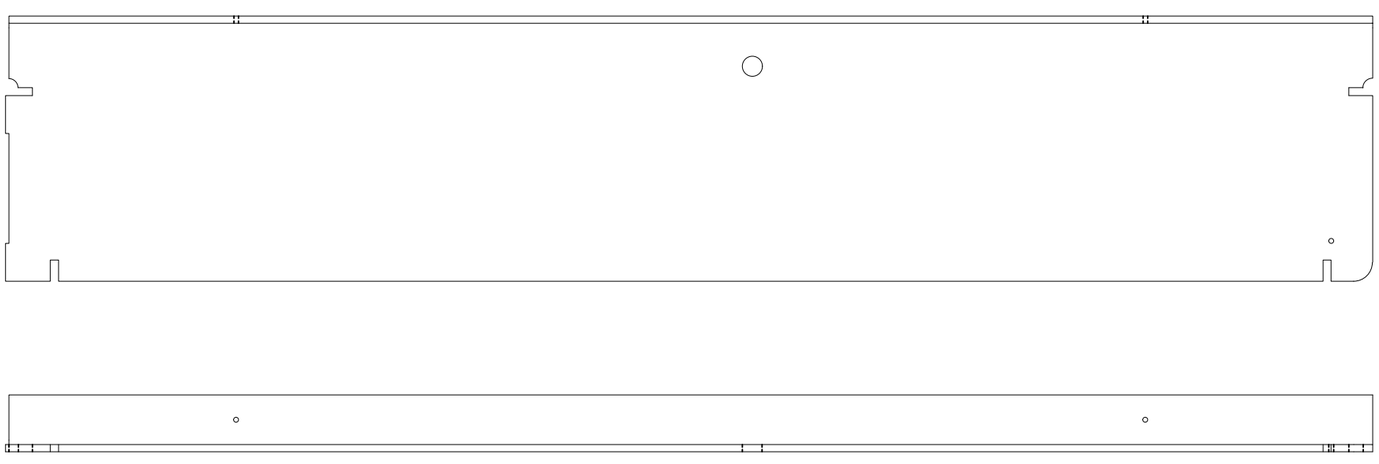

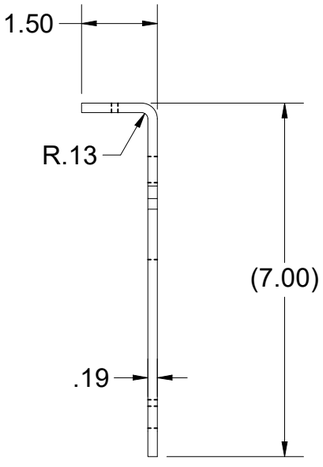

BEND TABLE				MATERIAL IFS: 100007734
BEND RADIUS	V-OPENING	BEND ANGLE	BEND DEDUCTION	MATERIAL THK: 0.1875
0.125	1	90	0.325	MAT DESCRIPTION: STL ASTM A36 SM-HRPO 60X120 RAW .1875

Infrastructure JENSEN

527 Dunn Circle, Sparks, NV 89431
775-352-2716 FAX: 755-358-8127
JENSENMETALTECH.COM

©2026 Jensen Infrastructure - All rights reserved.
All materials appearing as Jensen Infrastructure documents and the like are proprietary work product and are protected under U.S. copyright and other laws. Unless in conjunction with business conducted with Jensen Infrastructure , any use of Jensen Infrastructure work product without express, written consent is prohibited, and recipient is prohibited from distributing any and all work product to non-approved third parties under penalty of civil action.
This product shall only be produced in a Jensen Infrastructure facility.

NAME & DESCRIPTION: 200099058 — Frame Component Steel Frame Side Left, Cast In		REV: H-1-3
WEIGHT: 15.695 lbmass	DRAWN BY: R. Dohr	SHEET: 19 OF 19
CREATED: 3/28/2022	MODIFIED: 2/26/2026	

200061796.idw