DESIGN NOTES:

- CONCRETE SHALL HAVE A 28 DAY MINIMUM COMPRESSIVE STRENGTH OF 7000 PSI
- SOIL UNIT WEIGHT DRY - 110 lbs/cu.ft.
- EQUIVALENT LATERAL PRESSURE DRY - 40 lbs/cu.ft.
- SOIL UNIT WEIGHT WET - 120 lbs/cu.ft.
- EQUIVALENT LATERAL PRESSURE WET - 80 lbs/cu.ft.

PRODUCTION NOTES:

- THIS PRODUCT SHALL ONLY BE PRODUCED IN A JENSEN PRECAST FACILITY
- LIFTING INSERTS SHALL BE INSTALLED PER MANUFACTURER'S REQUIREMENTS
- APPLIED FINISH - NONE
- INTERNAL LINER/COATING - NONE
- EXTERNAL LINER/COATING - NONE

BILL OF MATERIALS

ITEM	UNIT QTY	QTY	PART NUMBER	DESCRIPTION
1	19.947 ft^3	19.947 ft^3	100011429	CONCRETE MIX GENERIC 7000 PSI
2	1	4	100044093	STRUT C-CHANNEL 13/16 X 1-5/8 16GA SOLID GALV SHALLOW W-400/P4000 - 36IN
3	1	2	100041375	GROUND INSERT BOTTLE ROCKET 1/2-13 BRONZE w/ 0.375x16" STEEL ROD
4	1	4	100037074	PULL IRON .5DIA 6 OH X 3W GALV XXX VALLEY NUTBOLT
5	1	4	100046070	ANCHOR FLEET-LIFT 2T X 2.3" H-ANCHOR P94H FL523G DAYTON - GALV
6	1	1	200067608	REINFORCING MAT 200067608

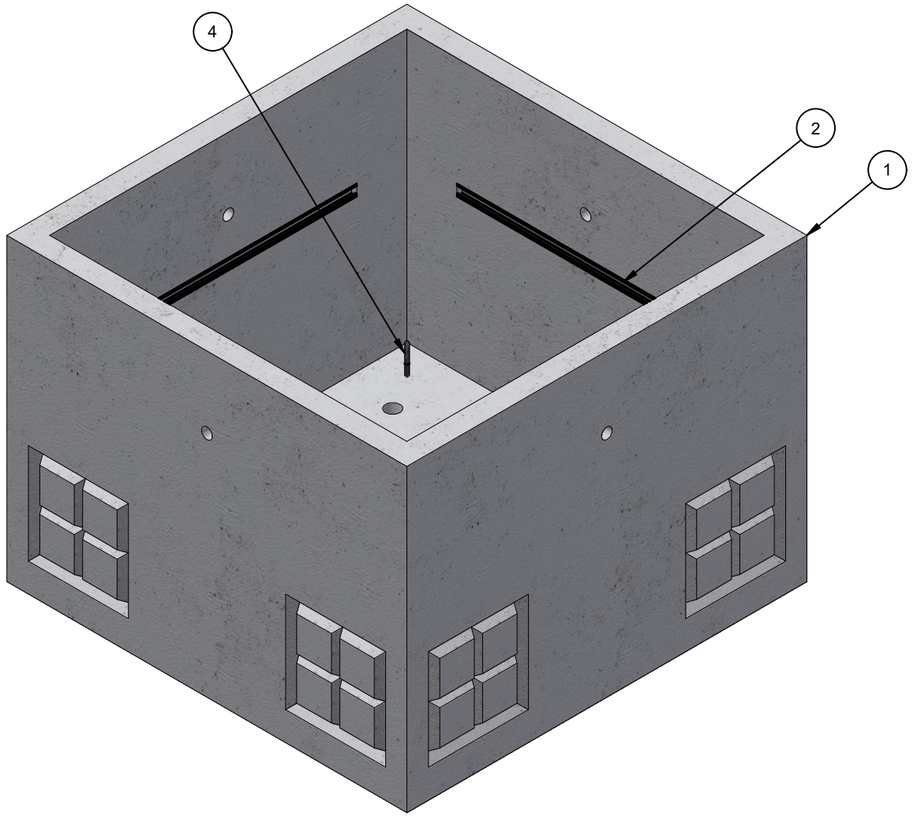

ISO LAYOUT

200061700.idw

LIFTING NOTES
■ THIS CONCRETE PRODUCT IS DESIGNED TO BE LIFTED AT 2500 PSI WITH 4 LIFT CONNECTIONS EQUALLY LOADED TO 2 LIFTING POINTS AT A MINIMUM 60° SLING ANGLE, MEASURED FROM HORIZONTAL.
*All rigging shall be design by a qualified professional. Loading diagrams show illustrations of possible rigging setups to achieve the required sling angle and load leg equalization. Other valid rigging configurations are possible. A qualified professional must be consulted prior to lifting.

RIGGING DIAGRAM* **B**

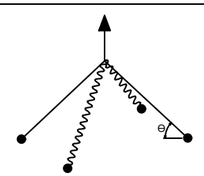

BURY DEPTH:	0.0' - 5.5' to Top		
WATER LEVEL:	5.0'	APPROX. WEIGHT:	3147.37 Lbs
DESIGN SPEC:	ACI 318,ASTM C857	LOADING SPEC:	A-16 (AASHTO HS20-44)
REINFORCEMENT TYPE:	Rebar	LIFTING TYPE:	Lift Hole

Infrastructure
JENSEN
WWW.JENSENPRECAST.COM

©2025 Jensen Infrastructure - All rights reserved.
All materials appearing as Jensen Infrastructure documents and the like are proprietary work product and are protected under U.S. copyright and other laws.
Unless in conjunction with business conducted with Jensen Infrastructure , any use of Jensen Infrastructure work product without express, written consent is prohibited, and recipient is prohibited from distributing any and all work product to non-approved third parties under penalty of civil action. This product shall only be produced in a Jensen Infrastructure facility.

CHANGE HISTORY

NO.	DESCRIPTION	DATE	BY
A	DRAWING CREATED	3/25/2022	T.Larson
B	GROUNDING BOM CORRECTION	12/2/2022	DCH
C	UPDATED FORMAT, NOTES FOR AGENCY STANDARDS	8/15/2024	AMV

DESCRIPTION: Vault 5050x38 Rect. Bottom Section Knockout Sump PSE 7663900

CASTING LAYOUT

REV: C-2-1

PART NUMBER:	200061700	DRAWN BY:	A. Viveiros
CREATED:	3/25/2022	MODIFIED:	11/14/2025

SHEET: 1 OF 2

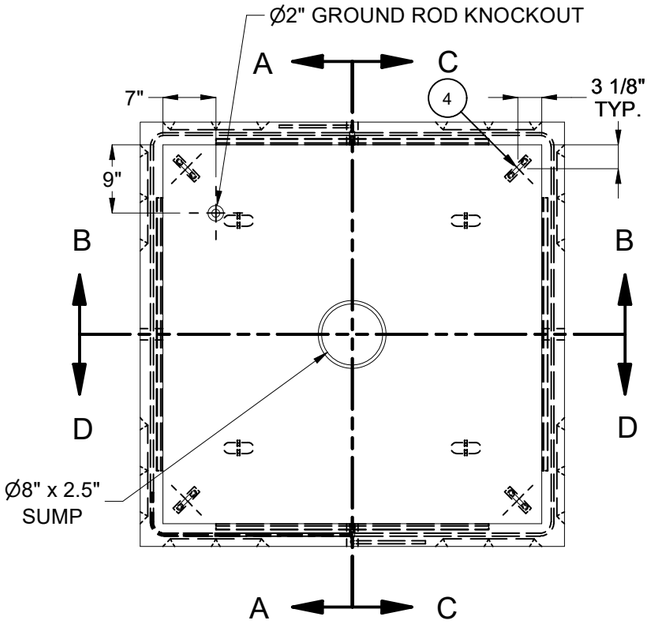

PLAN VIEW

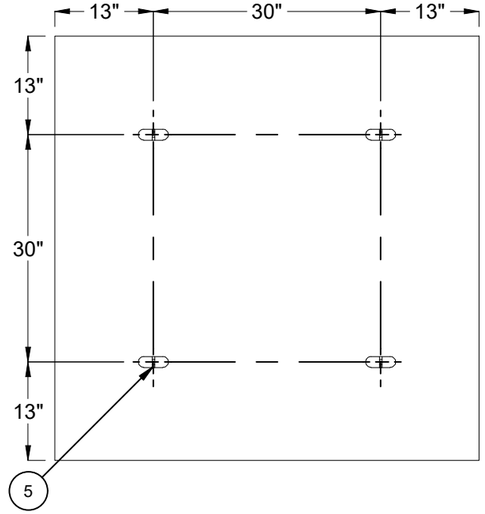

PLAN VIEW
(SHOWING DEMOLDING LIFTERS)

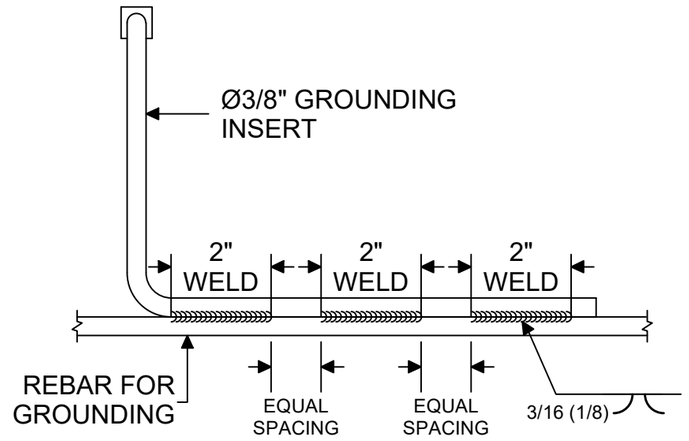

DETAIL 1

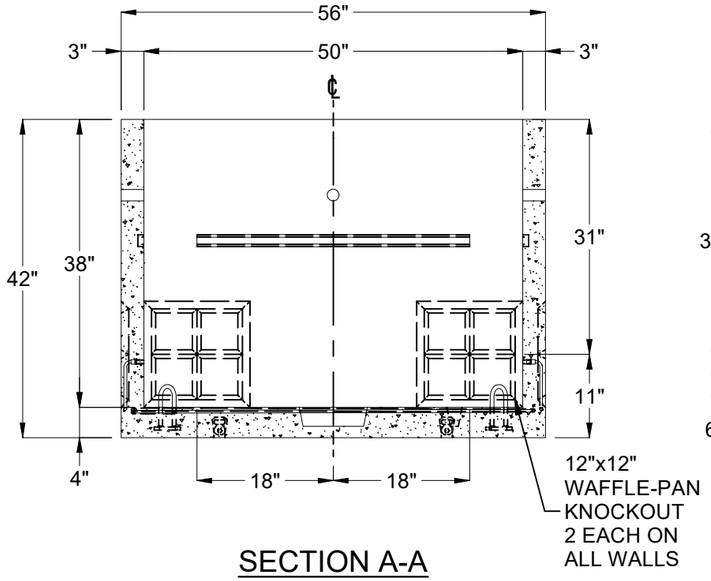

SECTION A-A

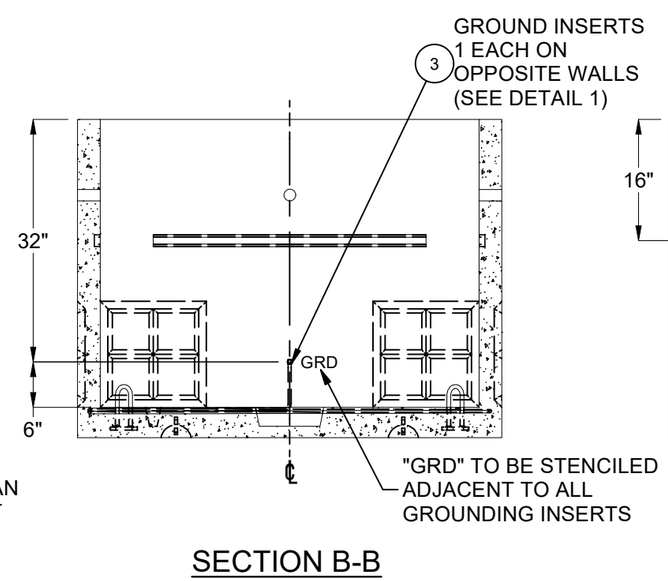

SECTION B-B

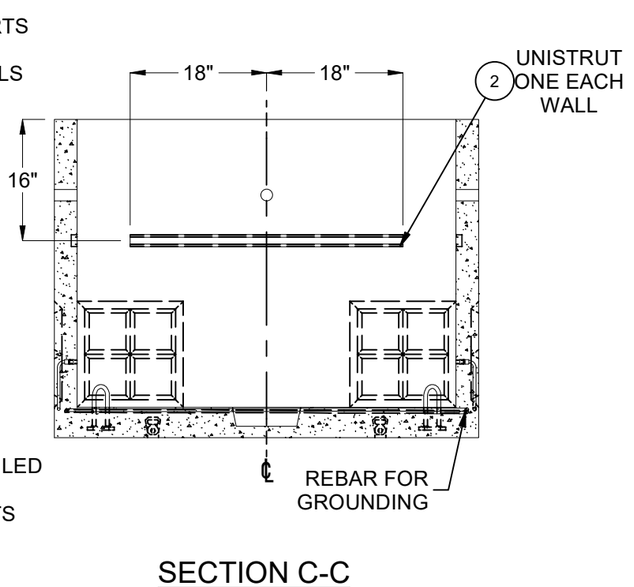

SECTION C-C

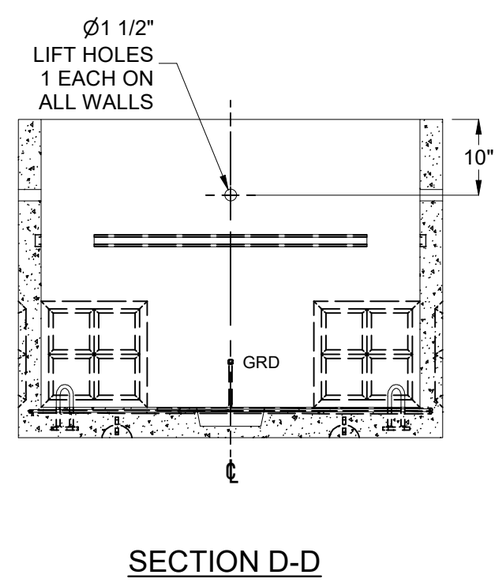

SECTION D-D

BURY DEPTH:	0.0' - 5.5' to Top		
WATER LEVEL:	5.0'	APPROX. WEIGHT:	3147.37 Lbs
DESIGN SPEC:	ACI 318,ASTM C857	LOADING SPEC:	A-16 (AASHTO HS20-44)
REINFORCEMENT TYPE:	Rebar	LIFTING TYPE:	Lift Hole

Infrastructure
JENSEN
WWW.JENSENPRECAST.COM

©2025 Jensen Infrastructure - All rights reserved.
All materials appearing as Jensen Infrastructure documents and the like are proprietary work product and are protected under U.S. copyright and other laws.
Unless in conjunction with business conducted with Jensen Infrastructure , any use of Jensen Infrastructure work product without express, written consent is prohibited, and recipient is prohibited from distributing any and all work product to non-approved third parties under penalty of civil action. This product shall only be produced in a Jensen Infrastructure facility.

DESCRIPTION:	Vault 5050x38 Rect. Bottom Section Knockout Sump PSE 7663900 CASTING DRAWING		REV: C-2-1
PART NUMBER:	200061700	DRAWN BY:	A. Viveiros
CREATED:	3/25/2022	MODIFIED:	11/14/2025
			SHEET: 2 OF 2

200061700.idw