| NOTES |
|---|
| ■ FOR COMPLETE DESIGN AND PRODUCT INFORMATION CONTACT JENSEN PRECAST. |

## BILL OF MATERIALS

| ITEM | QTY | PART NUMBER | DESCRIPTION |
|---|---|---|---|
| 1 | 16.190 ft^3 | 100011425 | CONCRETE MIX GENERIC 5000 PSI |
| 2 | 96.0000 in | 100022114 | STRUT C-CHANNEL 13/16 X 1-5/8 16GA SOLID GALV SHALLOW W-400/P4000 |
| 3 | 4 | 100005933 | GROUND INSERTS BOTTLE ROCKET BRASS 1/2X16 STEEL ROD 12G69 |
| 4 | 4 | 100034833 | ANCHOR RAPID LIFT TECH 2.5T CLUTCH 2.4375IN LONG MB RL-25 |
| 5 | 4 | 100037074 | PULL IRON .5DIA 6 OH X 3W GALV XXX VALLEY NUTBOLT |
| 6 | 1 | 300127779 | REINFORCING MAT 300127779 |

200061507.idw

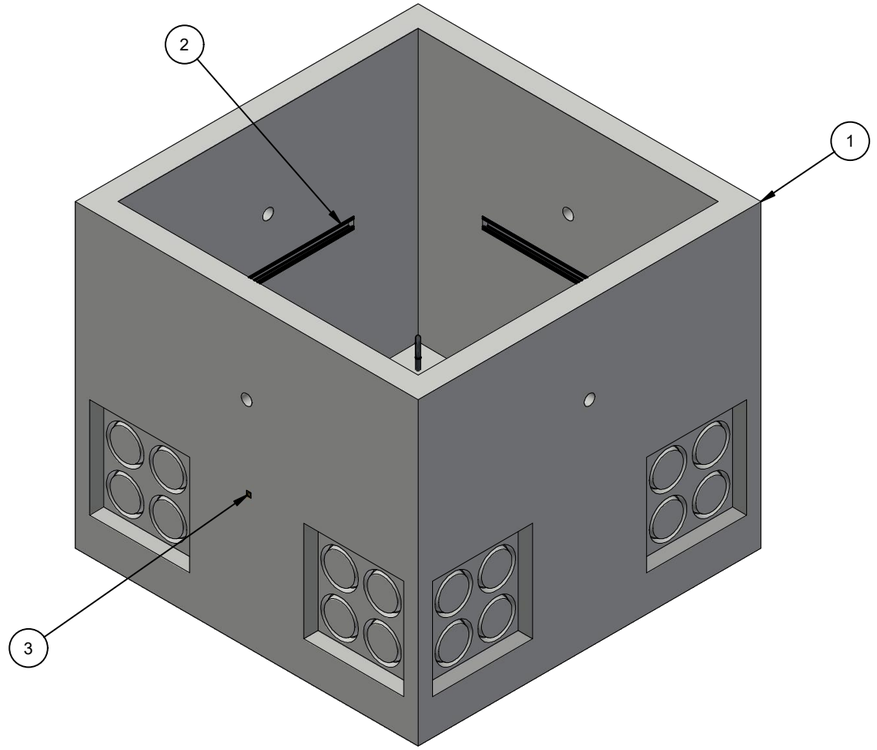


ISO LAYOUT

| LIFTING NOTES |
|---|
| ■ THIS CONCRETE PRODUCT IS DESIGNED TO BE LIFTED AT 2500 PSI WITH 4 LIFT CONNECTIONS EQUALLY LOADED TO 2 LIFTING POINTS AT A MINIMUM 60° SLING ANGLE, MEASURED FROM HORIZONTAL. |

| | | | |
|---|---|---|---|
| BURY DEPTH: | 0.0' - 2.0' to Top | | |
| WATER LEVEL: | 5.0' | APPROX. WEIGHT: | 2453.93 Lbs |
| DESIGN SPEC: | ASTM C857,ACI 318 | LOADING SPEC: | A-16 (AASHTO HS20-44) |
| REINFORCEMENT TYPE: | Rebar | LIFTING TYPE: | Tech Erection Anchor |

JENSEN PRECAST EST. 1968

WWW.JENSENPRECAST.COM

©2026 Jensen Precast- All rights reserved.
All materials appearing as Jensen Precast documents and the like are proprietary work product and are protected under U.S. copyright and other laws.
Unless in conjunction with business conducted with Jensen Precast, any use of Jensen Precast work product without express, written consent is prohibited, and recipient is prohibited from distributing any and all work product to non-approved third parties under penalty of civil action.

| REVISION HISTORY | | | |
|---|---|---|---|
| REV | DESCRIPTION | DATE | BY |
| 1 | INITIAL RELEASE | 3/2/2022 | MF |

| | | | | |
|---|---|---|---|---|
| DESCRIPTION: Vault 4242x38 Rect. Bottom Section Knockout Sump CASTING LAYOUT | | | | REV: A-3 |
| PART NUMBER: | 200061507 | DRAWN BY: | M. Foster | SHEET: 1 OF 2 |
| CREATED: | 4/10/2020 | MODIFIED: | 2/9/2026 | |

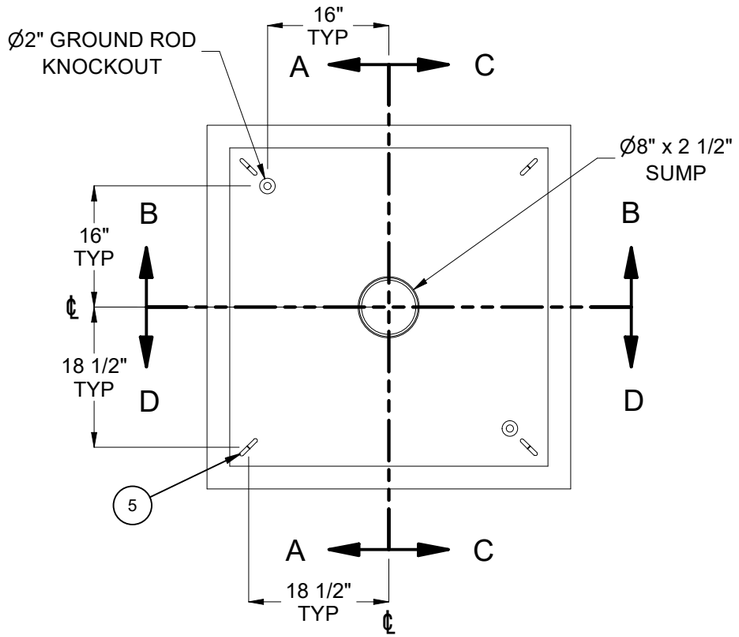


PLAN VIEW

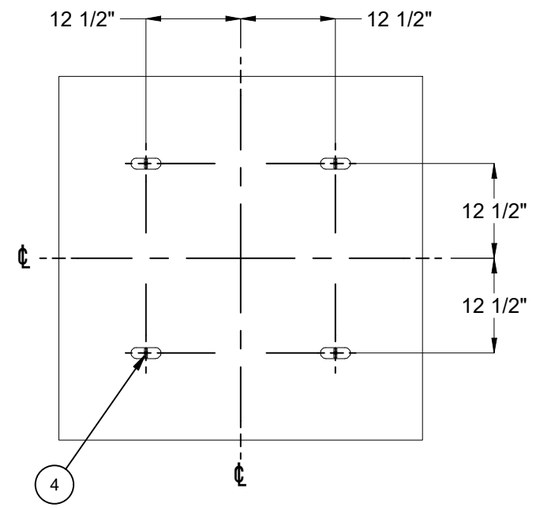


PLAN VIEW
(SHOWING DEMOLDING LIFTERS)

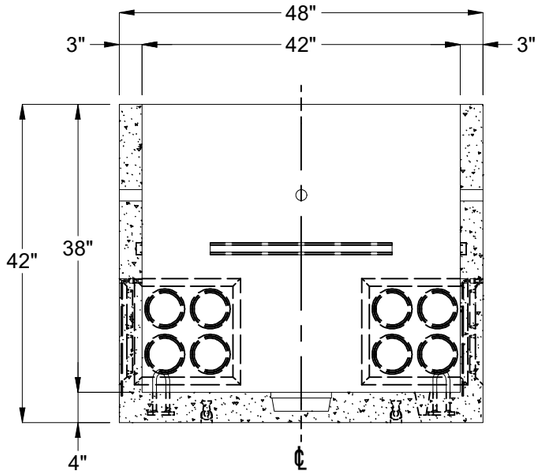


SECTION A-A

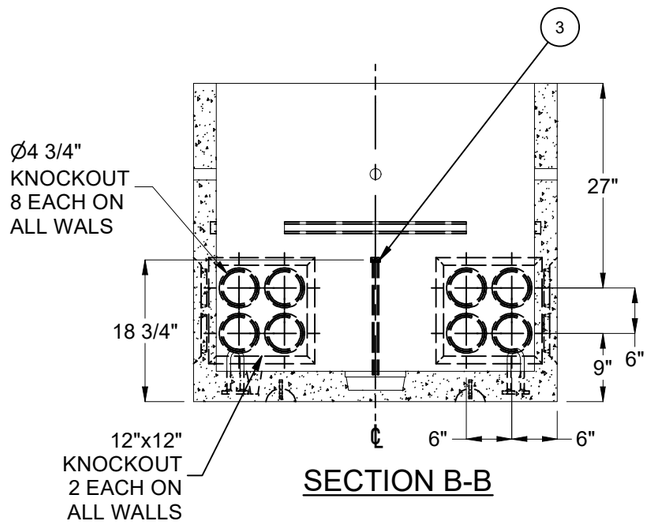


SECTION B-B

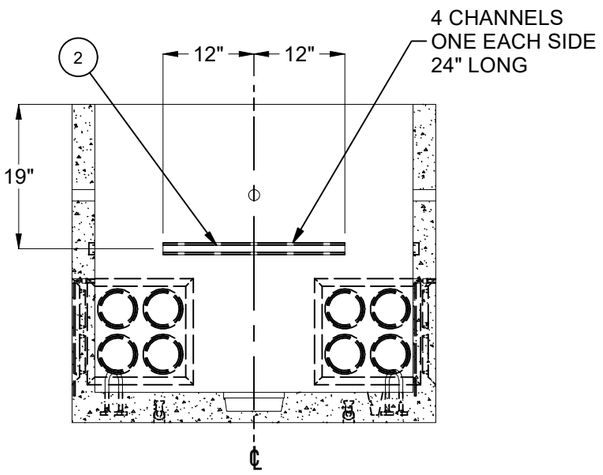


SECTION C-C

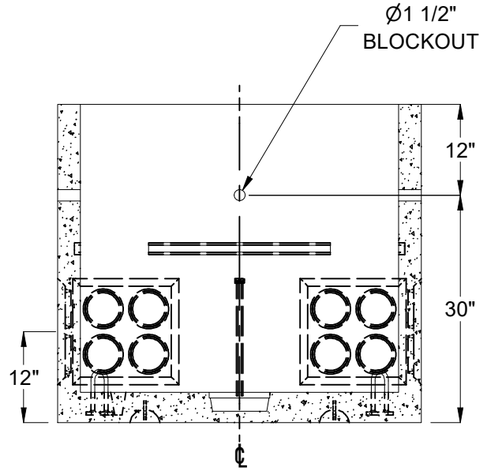


SECTION D-D

| | | | |
|---|---|---|---|
| BURY DEPTH: | 0.0' - 2.0' to Top | | |
| WATER LEVEL: | 5.0' | APPROX. WEIGHT: | 2453.93 Lbs |
| DESIGN SPEC: | ASTM C857,ACI 318 | LOADING SPEC: | A-16 (AASHTO HS20-44) |
| REINFORCEMENT TYPE: | Rebar | LIFTING TYPE: | Tech Erection Anchor |

JENSEN PRECAST EST. 1968

WWW.JENSENPRECAST.COM

©2026 Jensen Precast- All rights reserved.
All materials appearing as Jensen Precast documents and the like are proprietary work product and are protected under U.S. copyright and other laws.
Unless in conjunction with business conducted with Jensen Precast, any use of Jensen Precast work product without express, written consent is prohibited, and recipient is prohibited from distributing any and all work product to non-approved third parties under penalty of civil action.

| | | | |
|---|---|---|---|
| DESCRIPTION: | Vault 4242x38 Rect. Bottom Section Knockout Sump<br>CASTING DRAWING | | REV: A-3 |
| PART NUMBER: | 200061507 | DRAWN BY: | M. Foster |
| CREATED: | 4/10/2020 | MODIFIED: | 2/9/2026 |
| | | | SHEET: 2 OF 2 |

200061507.idw