NOTES
■ FOR COMPLETE DESIGN AND PRODUCT INFORMATION CONTACT JENSEN PRECAST.

BILL OF MATERIALS

ITEM	QTY	PART NUMBER	DESCRIPTION	WEIGHT (LBS)
1	14.689 ft^3	100002728	CONCRETE MIX GENERIC 4000 PSI	2207.51
2	2	100002854	INSERT MH RUNG PLASTIC SP SOCKET	.06
3	1	100003363	REINF HOOP STEEL .25235DIA GA ASTM A-1064 54.25DIA	2.40
4	1	100011239	REINF HOOP STEEL 42 DIA .250 WIRE DIA	1.83
5	1	100006796	REINF HOOP STEEL .25235DIA GA 29DIA	1.28

200061419.idw

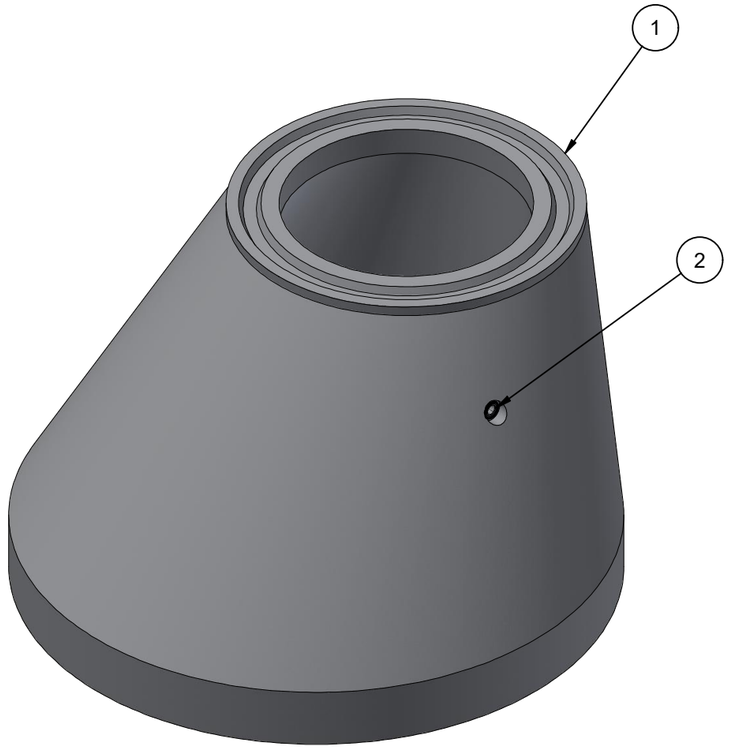

ISO LAYOUT

LIFTING NOTES
■ THIS CONCRETE PRODUCT IS DESIGNED TO BE LIFTED AT 2500 PSI WITH 2 LIFT CONNECTIONS EQUALLY LOADED TO 2 LIFTING POINTS AT A MINIMUM 45°, MAXIMUM 90° SLING ANGLE, MEASURED FROM HORIZONTAL.

BURY DEPTH:	0.0' - 2.0' to Top		
WATER LEVEL:	0.0'	WEIGHT:	2213.15 Lbs
DESIGN SPEC:	ASTM C478	LOADING SPEC:	A-16 (AASHTO HS20-44)
REINFORCEMENT TYPE:	Plain Wire	LIFTING TYPE:	SP Socket

JENSEN PRECAST EST. 1968

WWW.JENSENPRECAST.COM

©2019 Jensen Precast- All rights reserved.
All materials appearing as Jensen Precast documents and the like are proprietary work product and are protected under U.S. copyright and other laws.
Unless in conjunction with business conducted with Jensen Precast, any use of Jensen Precast work product without express, written consent is prohibited, and recipient is prohibited from distributing any and all work product to non-approved third parties under penalty of civil action.

REVISION HISTORY

REV	DESCRIPTION	DATE	BY
1	INITIAL RELEASE	3/16/2022	MM

DESCRIPTION: Manhole Cone Eccentric D4858 to D24 x 36IN TU CASTING LAYOUT				REV: A-1
PART NUMBER:	200061419	DRAWN BY:	M. Montez	SHEET: 1 OF 2
CREATED:	10/7/2016	MODIFIED:	3/16/2022	

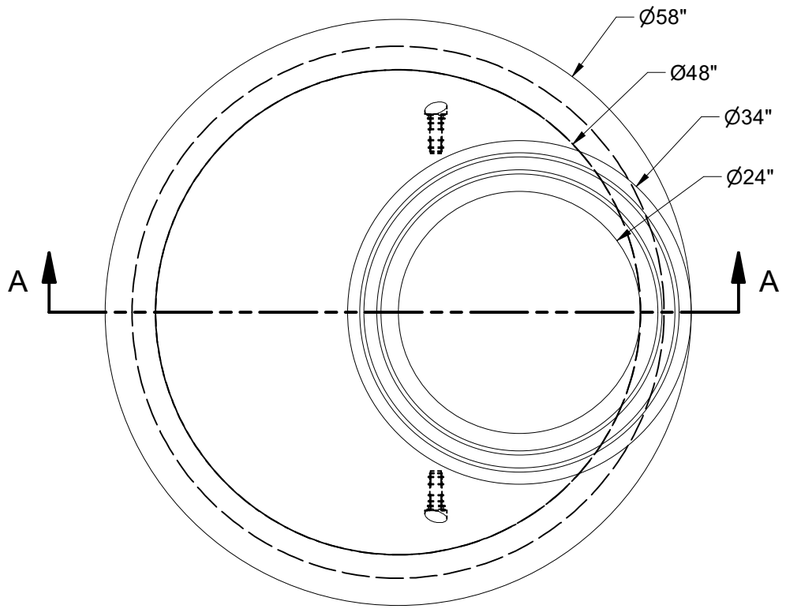

PLAN VIEW

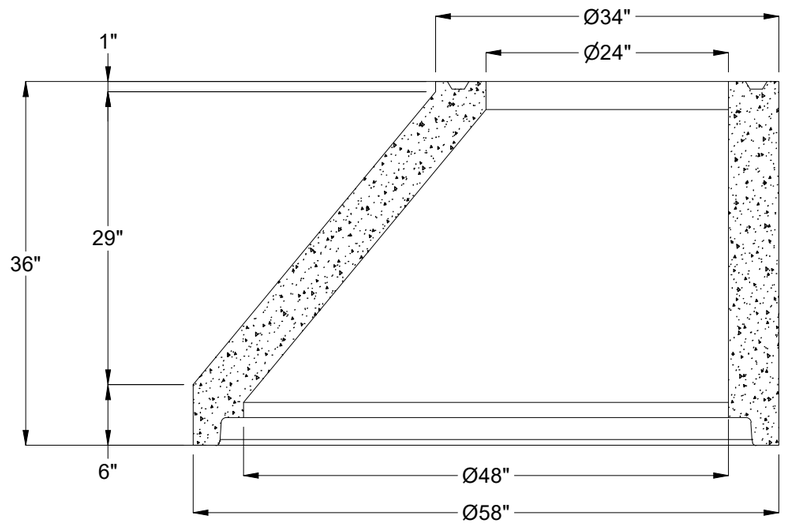

SECTION A-A

BURY DEPTH:	0.0' - 2.0' to Top		
WATER LEVEL:	0.0'	WEIGHT:	2213.15 Lbs
DESIGN SPEC:	ASTM C478	LOADING SPEC:	A-16 (AASHTO HS20-44)
REINFORCEMENT TYPE:	Plain Wire	LIFTING TYPE:	SP Socket

JENSEN PRECAST EST. 1968

WWW.JENSENPRECAST.COM

©2019 Jensen Precast- All rights reserved.
All materials appearing as Jensen Precast documents and the like are proprietary work product and are protected under U.S. copyright and other laws.
Unless in conjunction with business conducted with Jensen Precast, any use of Jensen Precast work product without express, written consent is prohibited, and recipient is prohibited from distributing any and all work product to non-approved third parties under penalty of civil action.

DESCRIPTION:	Manhole Cone Eccentric D4858 to D24 x 36IN TU CASTING DRAWING		REV: A-1
PART NUMBER:	200061419	DRAWN BY:	M. Montez
CREATED:	10/7/2016	MODIFIED:	3/16/2022
			SHEET: 2 OF 2

200061419.idw