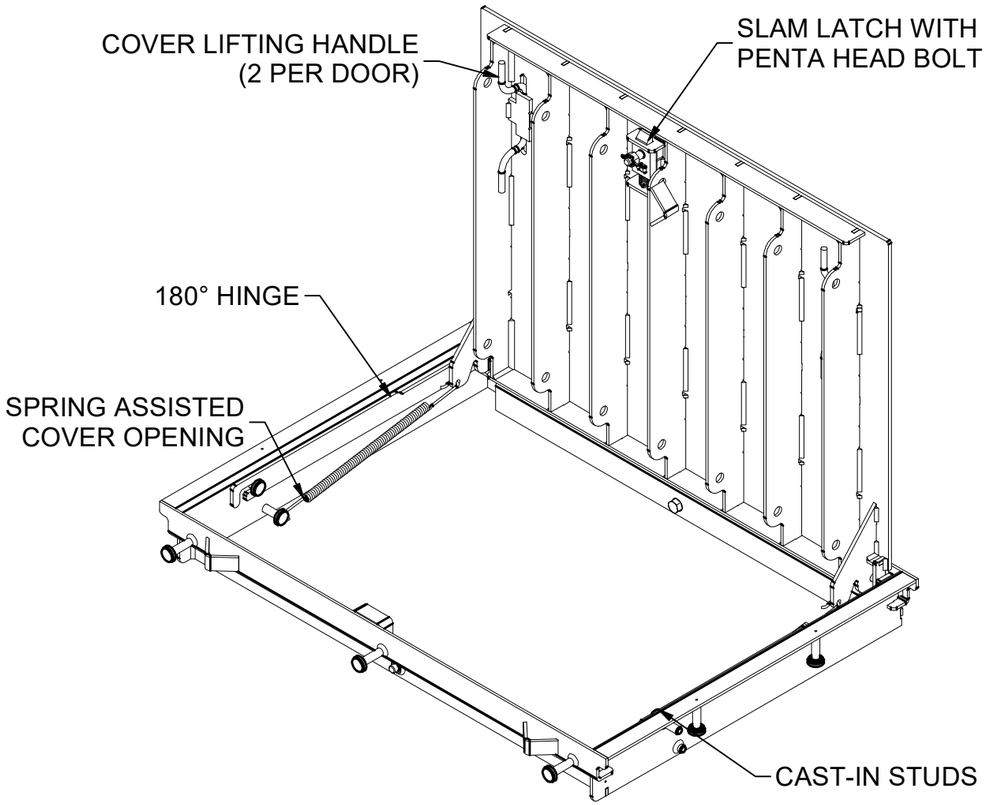

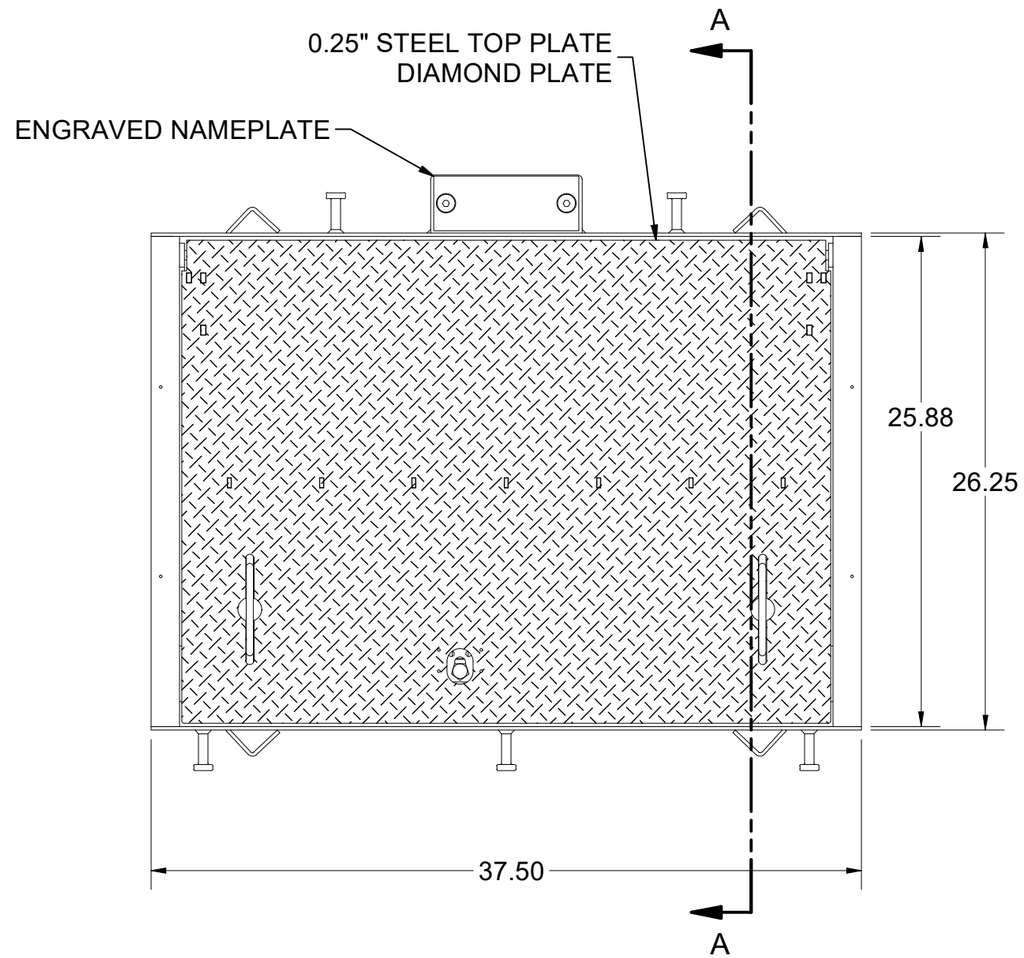

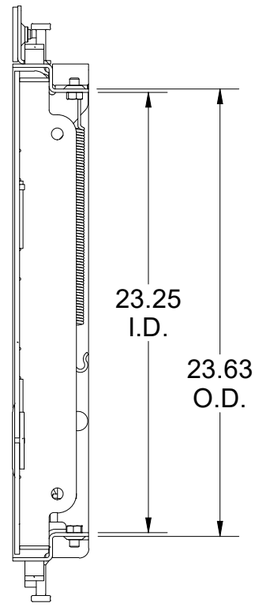

SECTION A-A

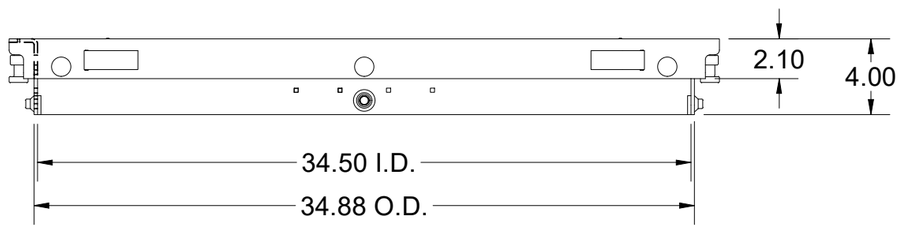

ROBOT WELDED

LOADING CRITERIA: ASTM C1802 Load Level 05

16,000 lb load on 10" x 20" footprint, with 30% impact restricted to unrestricted parking lanes and alleyways where traffic speed is limited to 15 miles per hour.

SURFACE:	Diamond Plate	FINISH:	Galvanized
WEIGHT:	149.93 lbs	MARKING:	As Noted

Infrastructure
JENSEN
527 Dunn Circle, Sparks, NV 89431
775-352-2716 FAX: 755-358-8127
JENSENMETALTECH.COM

©2026 Jensen Infrastructure - All rights reserved.
All materials appearing as Jensen Infrastructure documents and the like are proprietary work product and are protected under U.S. copyright and other laws. Unless in conjunction with business conducted with Jensen Infrastructure , any use of Jensen Infrastructure work product without express, written consent is prohibited, and recipient is prohibited from distributing any and all work product to non-approved third parties under penalty of civil action.
This product shall only be produced in a Jensen Infrastructure facility.

DESCRIPTION:	CAS1-2436-CHF5-DP-G-SL-GR-PNW-OH04 24x36 Standard Cover Assembly (Loading Criteria Per ASTM C1802 Load Level 05, Steel, Hinged, Full Range, Handle (2 Per Door), Diamond Plate, Galvanized, Slam Latch, PNW) 04	REV:	F-1-5
PART NUMBER:	200060977	DRAWN BY:	R. Dohr
CREATED:	4/19/2022	MODIFIED:	2/26/2026
		SHEET:	1

200060977.idw

BILL OF MATERIALS

ITEM	ITEM QTY	QTY	PART NUMBER	DESCRIPTION	PART NAME
1	1	1	200088061	DAS1-SD-2436-HF5-DP-G-BD-SL-GR-PNW	200088061
2	1	1	200100363	FAS-2436-CHF-G-SL-OH04	200100363
3	2	2	100007733	Bolt Socket Flat Countersunk Head - 1/2-13 UNC - Grade 5 - Zinc - FT - 1"	100007872
4	1	1	100007915	SPRING COMPRESSION 055 X 5/8 X 7/8 LONG	100007915
5	1	1	100007862	HEX NUT NYLOCK - 5/16-18 UNC - 304SS	100007862
6	1	1	200084519	1/2" THK Cam Latch 304SS	200084519
7	2	2	100040068	CUSTOM EXTENSION SPRING:50LB-IN,15.352 IN LNG, .70 OD, .148 WIRE DIA	100040068
8	2	2	100004314	BOLT HEX 1/2-13 UNC 0.75 304SS	100004314
9	1	1	200071526	PNW HINGE SPRING MOUNT, 2" DEEP FRAME, LEFT	200071526
10	1	1	200071527	PNW HINGE SPRING MOUNT, 2" DEEP FRAME, RIGHT	200071527
11	1	1	100004002	Hex Bolt 5/16-18 UNC 316SS - PT - 2"	100004002
12	1	1	100007391	NAME PLATE STEEL - BLANK	100007391
13	1	1	100007749	BOLT PENTA 1/2-13 UNC 0.875 HEAD 2.25L SS DRILLED	100007749
14	1	1	100007729	HEX NUT SLOTTED CASTLE HEAD 1/2-13 SS	100007729
15	1	1	100007918	COTTER PIN 0.094DIA X 1-1/4	100007918

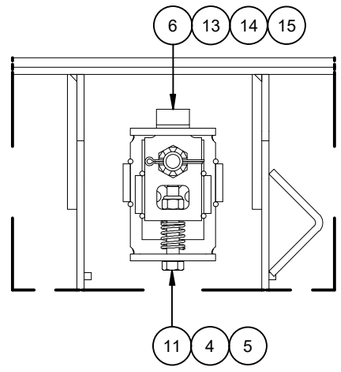

DETAIL A
SCALE 1/4

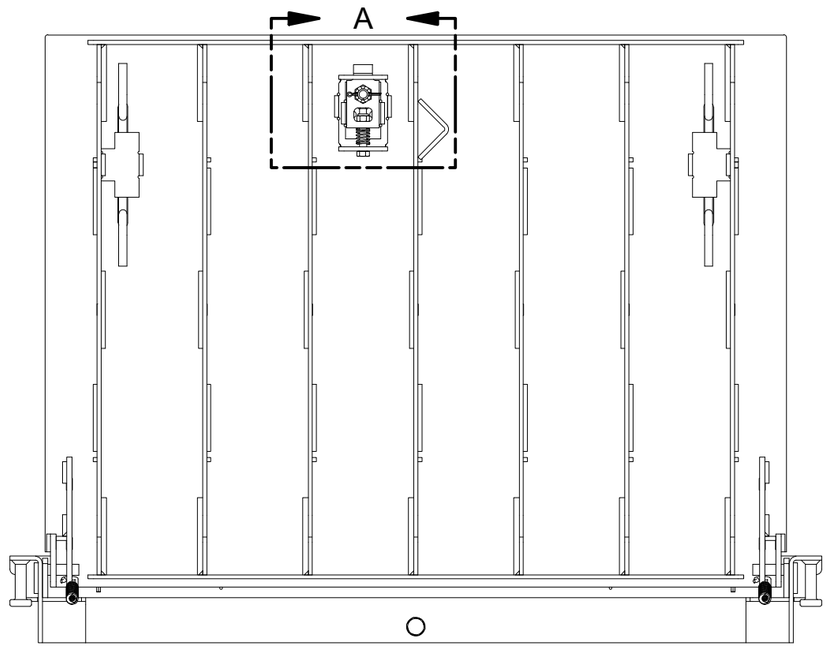

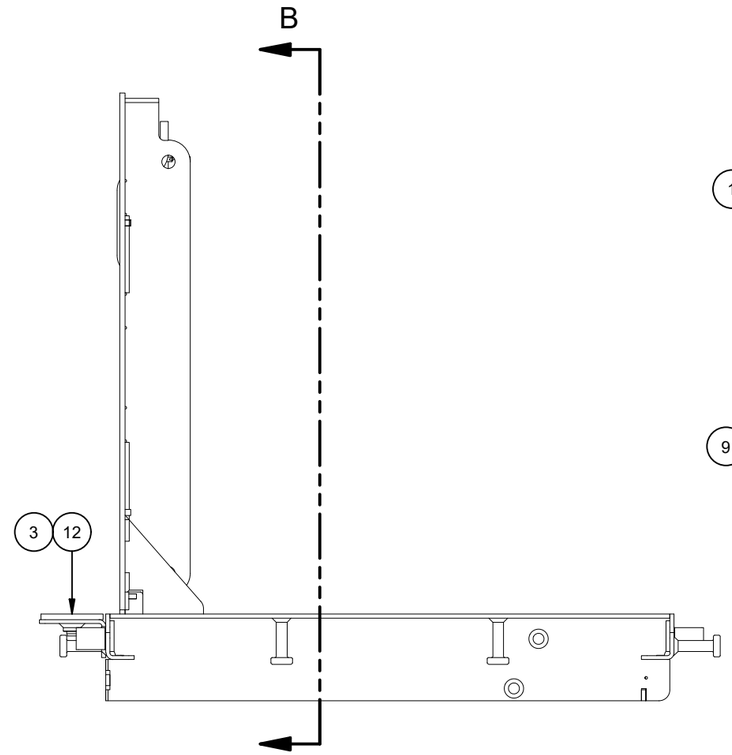

SECTION B-B
SCALE 1 / 7

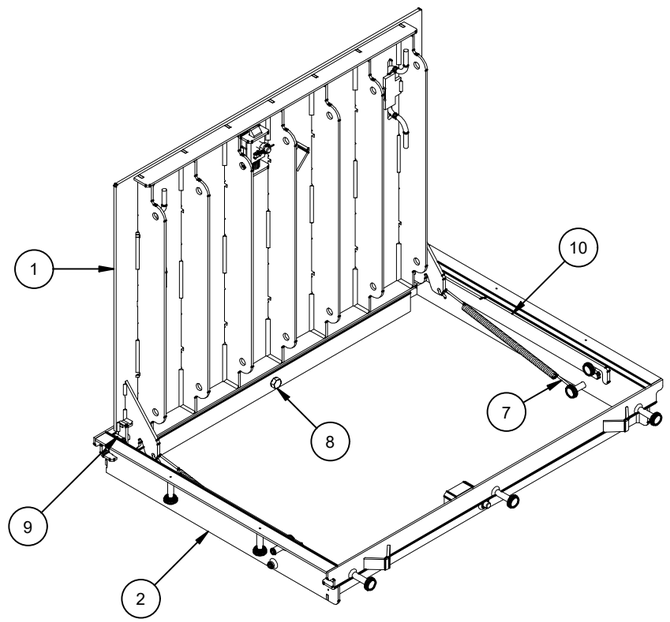

REVISION HISTORY		
DESCRIPTION	DATE	REVISED BY
REDESIGNED FRAME TO IMPROVE MANUFACTURABILITY; CHANGED NAMEPLATE TO BLANK DESIGN	4/17/2025	M. NEWMAN
CHANGED TO STAGGERED WELDS, ADDED FITMENT NOTCHES TO FRAME, UPDATED SLAM LATCH HARDWARE, CHANGED WELD NOTCHES	5/30/2025	M. BOUCHARD
REMOVED TABS FOR ROBOT WELDING	1/19/2026	M. BOUCHARD
CHANGED WELD LAYOUT FOR ROBOT WELDING	2/25/2026	M. BOUCHARD
ADDED SINGLE TAB TO STIFFENER FOR ROBOT	2/26/2026	R. DOHR

MATERIAL FINISH: Galvanized

MATERIAL SURFACE: Diamond Plate

Infrastructure JENSEN

527 Dunn Circle, Sparks, NV 89431
775-352-2716 FAX: 755-358-8127
JENSENMETALTECH.COM

©2026 Jensen Infrastructure - All rights reserved. All materials appearing as Jensen Infrastructure documents and the like are proprietary work product and are protected under U.S. copyright and other laws. Unless in conjunction with business conducted with Jensen Infrastructure , any use of Jensen Infrastructure work product without express, written consent is prohibited, and recipient is prohibited from distributing any and all work product to non-approved third parties under penalty of civil action. This product shall only be produced in a Jensen Infrastructure facility.

PART NUMBER & DESCRIPTION: 200060977 — CAS1-2436-CHF5-DP-G-SL-GR-PNW-OH04

REV: F-1-5

WEIGHT: 149.93 Lbs

DRAWN BY: R. Dohr

CREATED: 4/19/2022

MODIFIED: 2/26/2026

SHEET: 2

200060977.idw

BILL OF MATERIALS

ITEM	ITEM QTY	QTY	PART NUMBER	DESCRIPTION	PART NAME
1	1	67.382 lbmass	100007736	Door Component Steel Plate, Top	200088064
2	2	4.945 lbmass	100007734	Door Component Steel Side Bar	200088063
3	2	1.875 lbmass	100007735	Door Component Hinge	200088066
4	2	0.248 lbmass	100007735	Door Component Hinge-Secondary	200088067
5	7	25.156 lbmass	100007821	Door Component Steel Stiffener, Plate	200088065
6	1	1	200095591	Slam Latch Spacer Plate - 1/2" Thick, Steel	200095591
7	1	0.506 lbmass	100007734	Slam Latch Retainer	200085963
8	2	0.058 lbmass	100007734	Hinge Doubler Coupling Plate	200092484
9	2	2	100007644	LEAF PULL HANDLE A36 3/8IN DIAMETER	100007644
10	1	1	100007641	FRAME LIFTING BRACKET	100007641
11	2	2	100007646	HANDLE RETAINER STL	100007646

USE WELD INDICATORS AND NOTCHES

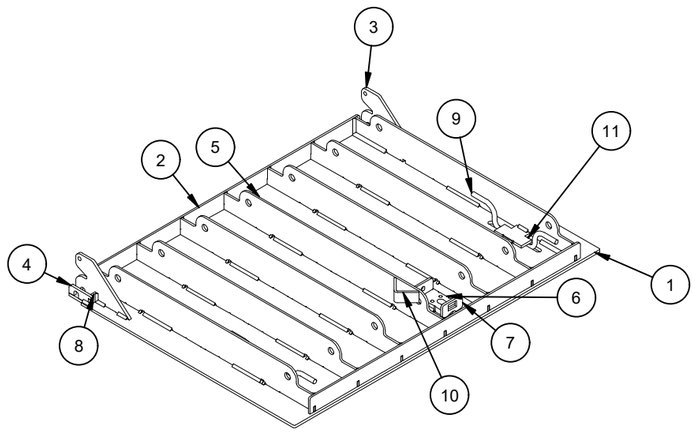

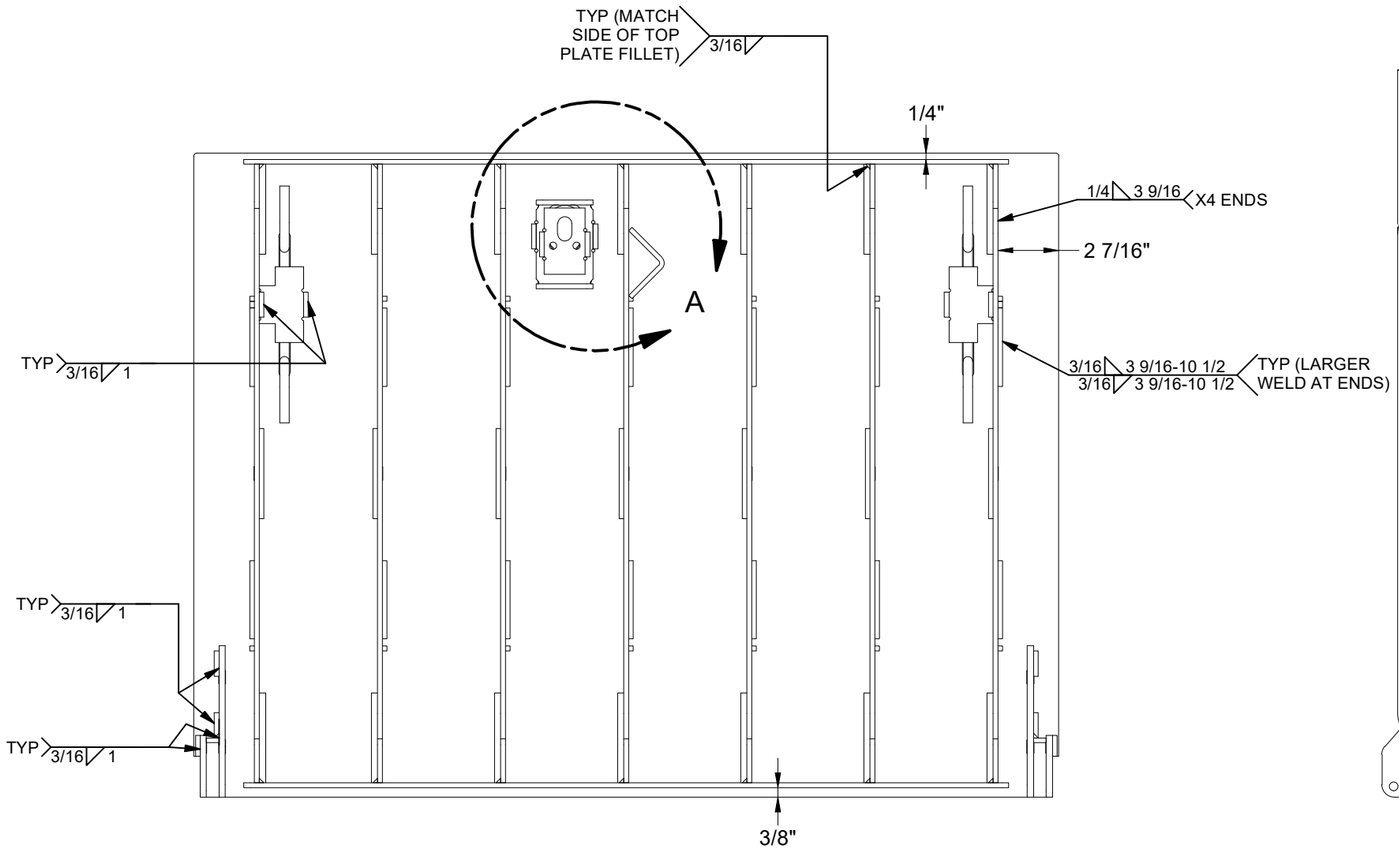

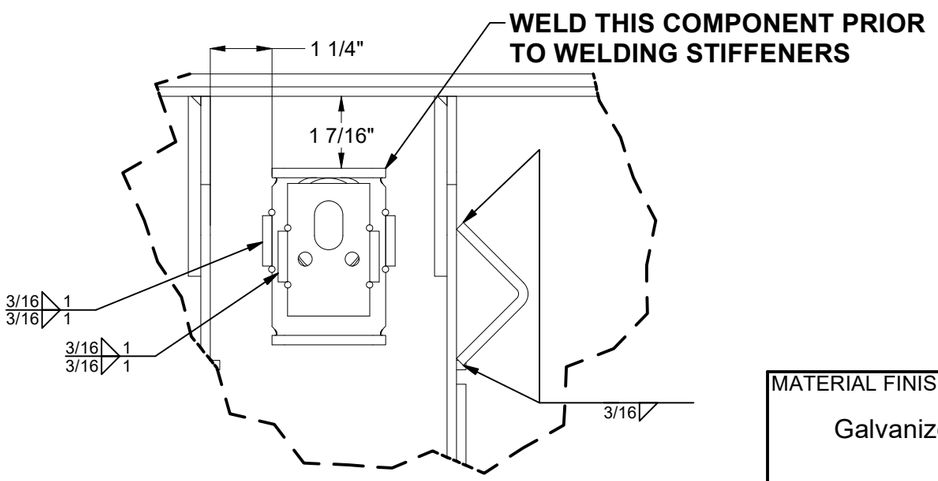

DETAIL A

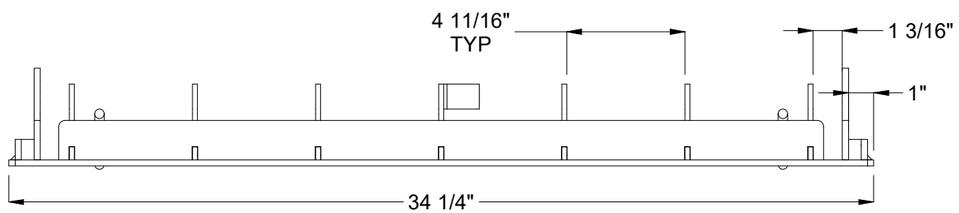

MATERIAL FINISH: Galvanized	Infrastructure JENSEN 527 Dunn Circle, Sparks, NV 89431 775-352-2716 FAX: 755-358-8127 *JENSENMETALTECH.COM*	©2026 Jensen Infrastructure - All rights reserved. All materials appearing as Jensen Infrastructure documents and the like are proprietary work product and are protected under U.S. copyright and other laws. Unless in conjunction with business conducted with Jensen Infrastructure , any use of Jensen Infrastructure work product without express, written consent is prohibited, and recipient is prohibited from distributing any and all work product to non-approved third parties under penalty of civil action. This product shall only be produced in a Jensen Infrastructure facility.	PART NUMBER & DESCRIPTION: 200088061 DAS1-SD-2436-HF5-DP-G-BD-SL-GR-PNW — REV: F-1-5
MATERIAL SURFACE: Diamond Plate			WEIGHT: 102.58 Lbs — DRAWN BY: R. Dohr — SHEET: 3
			CREATED: 4/19/2022 — MODIFIED: 2/26/2026

200060977.idw

BILL OF MATERIALS

ITEM	ITEM QTY	QTY	PART NUMBER	DESCRIPTION	PART NAME
1	1	7.133 lbmass	100007734	Frame Component Steel Frame Side Left, Cast In	200100364
2	1	9.211 lbmass	100007734	Frame Component Steel Frame End, Cast In	200100365
3	1	7.133 lbmass	100007734	Frame Component Steel Frame Side Right, Cast In	200100367
4	1	9.662 lbmass	100007734	Frame Component Steel Frame Front, Cast In	200100366
5	1	0.277 lbmass	100007734	SLAM LATCH CATCH FOR 2" FRAMES - PNW	200099056
6	1	1.857 lbmass	100007734	NAME PLATE FRAME ANGLE (FOR 2" FRAMES)	200087678
7	2	0.654 lbmass	100007734	Frame Component Steel Skirt Extension	200100368
8	13	13	100007889	Anchor Weld Stud - H4L - 0.5" - A29/A108 - 2.125"	100007895
9	4	4	100007728	NUT SELF-CLINCH 1/2-13 S-0813-1 RAW	100007728
10	4	4	100007641	FRAME LIFTING BRACKET	100007641

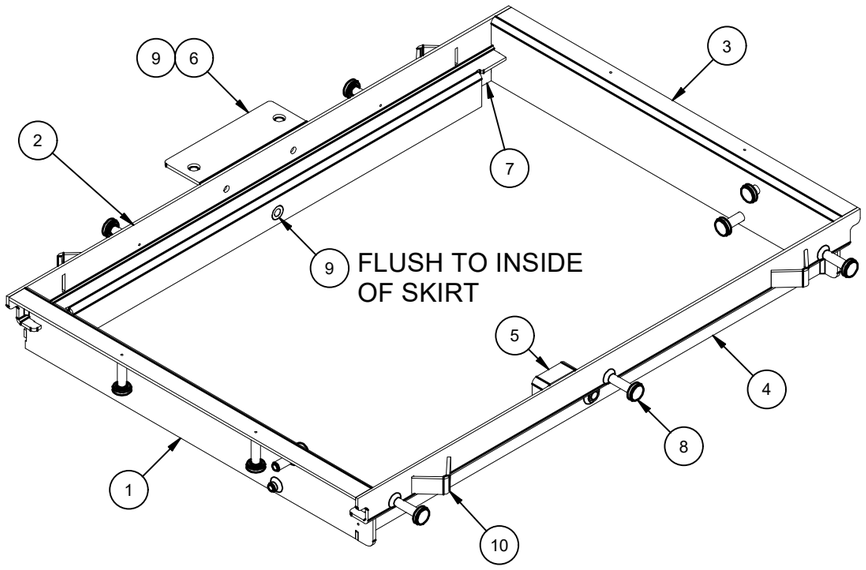

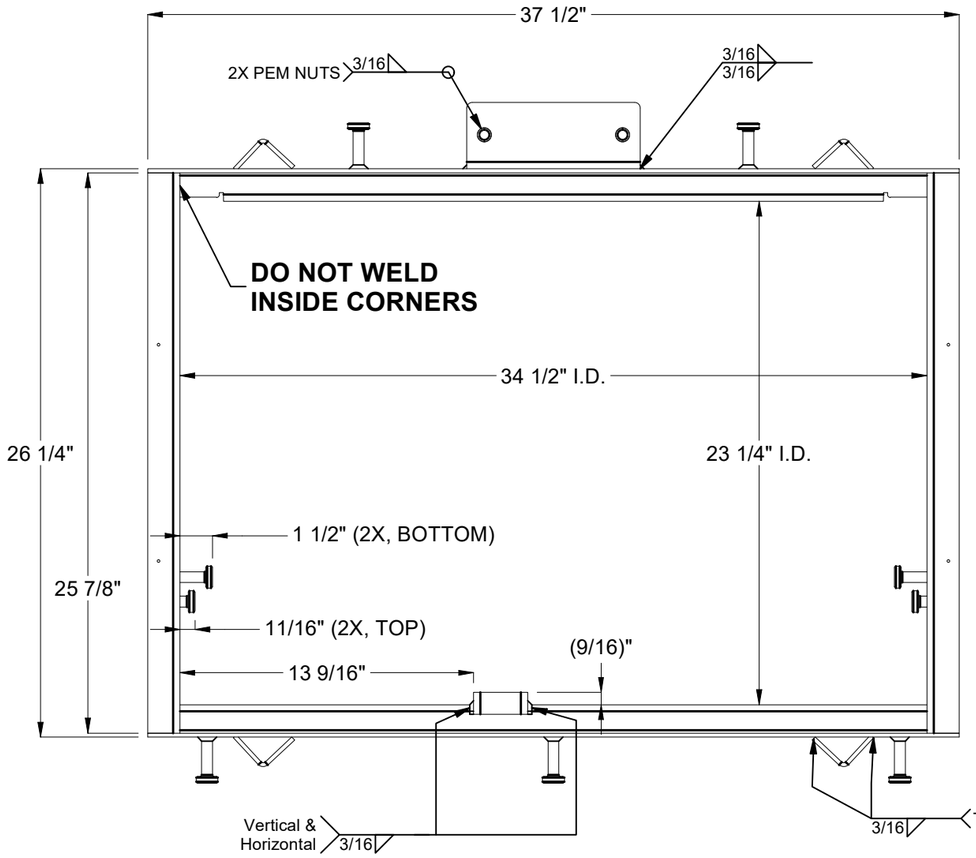

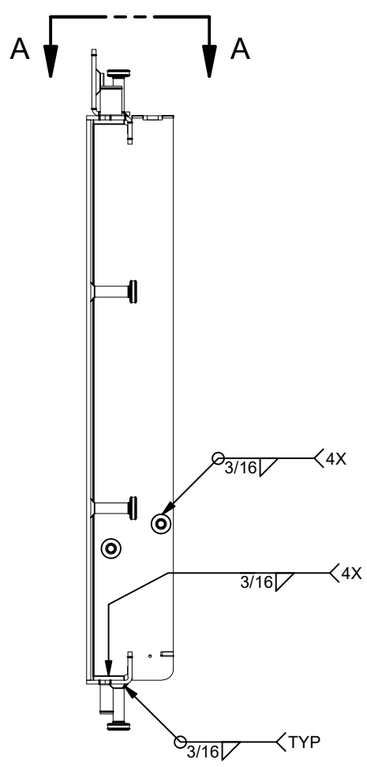

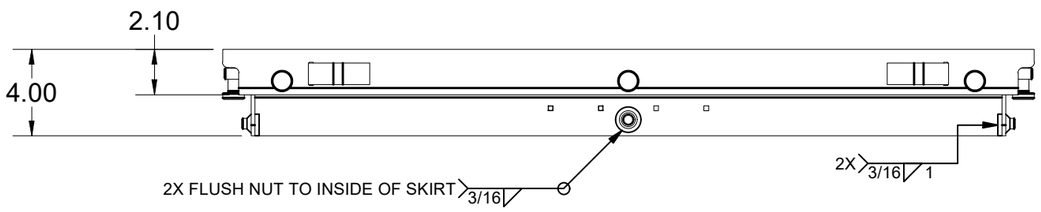

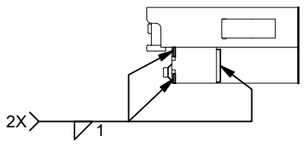

VIEW A-A
SCALE 1/8

MATERIAL FINISH: Galvanized	Infrastructure JENSEN 527 Dunn Circle, Sparks, NV 89431 775-352-2716 FAX: 755-358-8127 *JENSENMETALTECH.COM*	©2026 Jensen Infrastructure - All rights reserved. All materials appearing as Jensen Infrastructure documents and the like are proprietary work product and are protected under U.S. copyright and other laws. Unless in conjunction with business conducted with Jensen Infrastructure , any use of Jensen Infrastructure work product without express, written consent is prohibited, and recipient is prohibited from distributing any and all work product to non-approved third parties under penalty of civil action. This product shall only be produced in a Jensen Infrastructure facility.	PART NUMBER & DESCRIPTION: 200100363 FAS-2436-CHF-G-SL-OH04 — REV: F-1-5
MATERIAL SURFACE: Smooth			WEIGHT: 39.34 Lbs — DRAWN BY: R. Dohr — SHEET: 4
			CREATED: 4/19/2022 — MODIFIED: 2/26/2026

20006097.idw

BURN LIST - BOM

PART NAME	ITEM QTY	QTY	DESCRIPTION	STOCK NUMBER	MATERIAL	MASS	SHEET
200085963	1	0.506 lbmass	Slam Latch Retainer	100007734	STL ASTM A36 SM-HRPO 60X120 RAW .1875	0.506 lbmass	06
200087678	1	1.857 lbmass	NAME PLATE FRAME ANGLE (FOR 2" FRAMES)	100007734	STL ASTM A36 SM-HRPO 60X120 RAW .1875	1.857 lbmass	07
200088063	2	4.945 lbmass	Door Component Steel Side Bar	100007734	STL ASTM A36 SM-HRPO 60X120 RAW .1875	2.473 lbmass	08
200088064	1	67.382 lbmass	Door Component Steel Plate, Top	100007736	SHT STL CQ DP RAW .25 - 36 KSI YIELD	67.419 lbmass	09
200088065	7	25.156 lbmass	Door Component Steel Stiffener, Plate	100007821	SHT STL GR80 SM-HRPO RAW .1875	3.590 lbmass	10
200088066	2	1.875 lbmass	Door Component Hinge	100007735	STL ASTM A36 SM-HRPO RAW .250	0.937 lbmass	11
200088067	2	0.248 lbmass	Door Component Hinge-Secondary	100007735	STL ASTM A36 SM-HRPO RAW .250	0.124 lbmass	12
200092484	2	0.058 lbmass	Hinge Doubler Coupling Plate	100007734	STL ASTM A36 SM-HRPO 60X120 RAW .1875	0.029 lbmass	13
200099056	1	0.277 lbmass	SLAM LATCH CATCH FOR 2" FRAMES - PNW	100007734	STL ASTM A36 SM-HRPO 60X120 RAW .1875	0.277 lbmass	14
200100364	1	7.133 lbmass	Frame Component Steel Frame Side Left, Cast In	100007734	STL ASTM A36 SM-HRPO 60X120 RAW .1875	7.133 lbmass	15
200100365	1	9.211 lbmass	Frame Component Steel Frame End, Cast In	100007734	STL ASTM A36 SM-HRPO 60X120 RAW .1875	9.211 lbmass	16
200100366	1	9.662 lbmass	Frame Component Steel Frame Front, Cast In	100007734	STL ASTM A36 SM-HRPO 60X120 RAW .1875	9.662 lbmass	17
200100367	1	7.133 lbmass	Frame Component Steel Frame Side Right, Cast In	100007734	STL ASTM A36 SM-HRPO 60X120 RAW .1875	7.133 lbmass	18
200100368	2	0.654 lbmass	Frame Component Steel Skirt Extension	100007734	STL ASTM A36 SM-HRPO 60X120 RAW .1875	0.327 lbmass	19

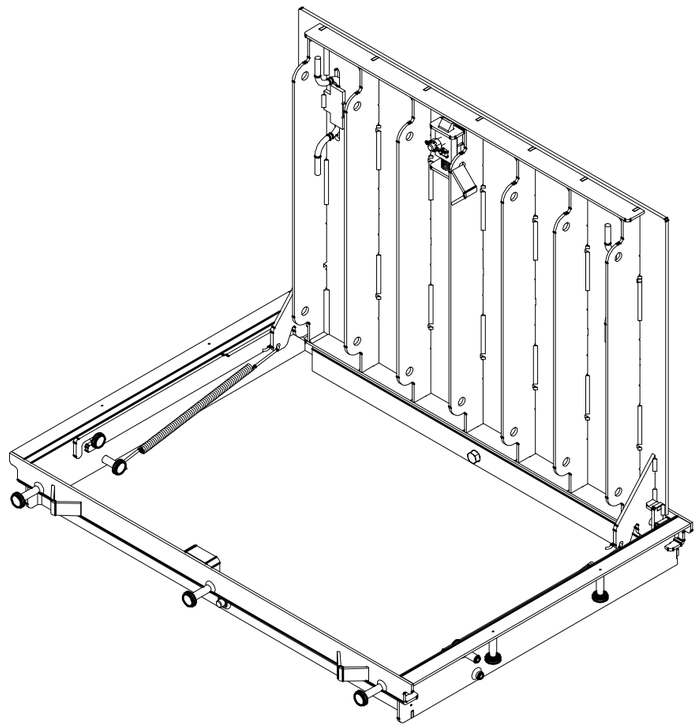

200060977.idw

MATERIAL FINISH: Galvanized

MATERIAL SURFACE: Diamond Plate

Infrastructure JENSEN
527 Dunn Circle, Sparks, NV 89431
775-352-2716 FAX: 755-358-8127
JENSENMETALTECH.COM

©2026 Jensen Infrastructure - All rights reserved.
All materials appearing as Jensen Infrastructure documents and the like are proprietary work product and are protected under U.S. copyright and other laws. Unless in conjunction with business conducted with Jensen Infrastructure , any use of Jensen Infrastructure work product without express, written consent is prohibited, and recipient is prohibited from distributing any and all work product to non-approved third parties under penalty of civil action.
This product shall only be produced in a Jensen Infrastructure facility.

PART NUMBER & DESCRIPTION: 200060977
CAS1-2436-CHF5-DP-G-SL-GR-PNW-OH04

REV: F-1-5

WEIGHT: 149.93 Lbs

DRAWN BY: R. Dohr

SHEET: 5

CREATED: 4/19/2022

MODIFIED: 2/26/2026

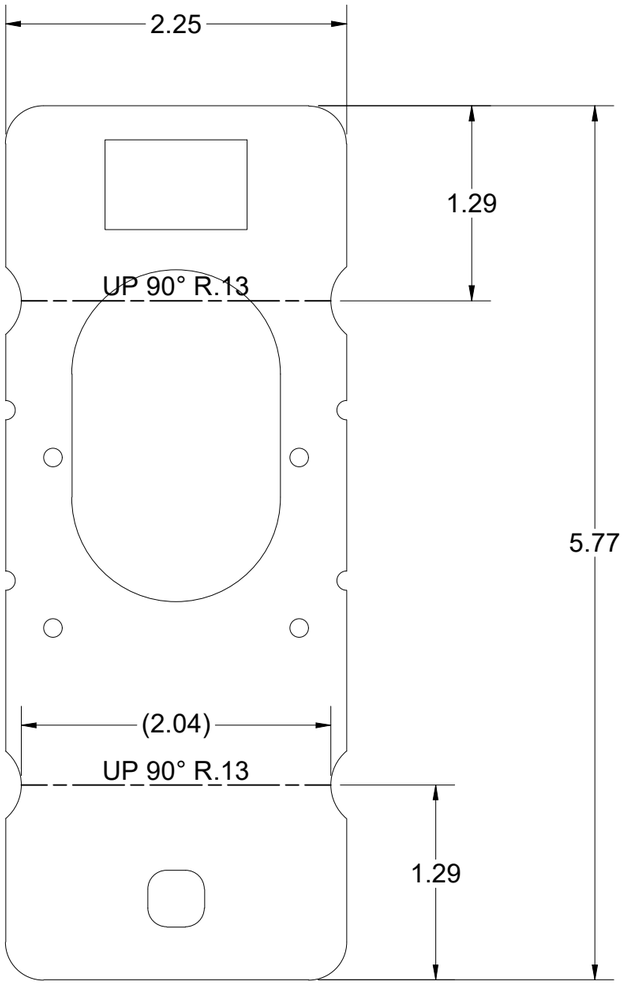

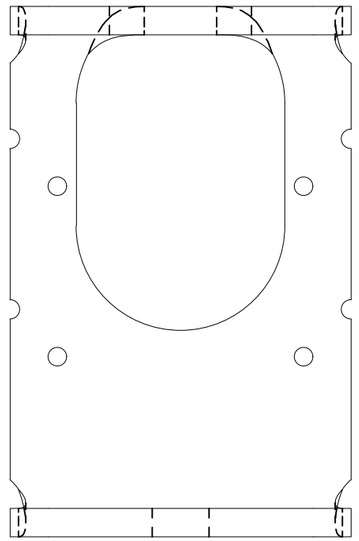

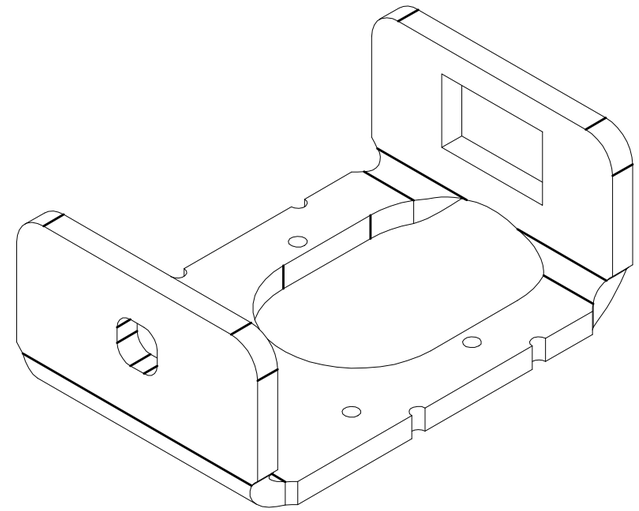

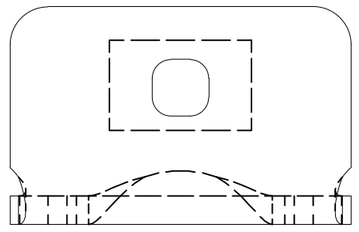

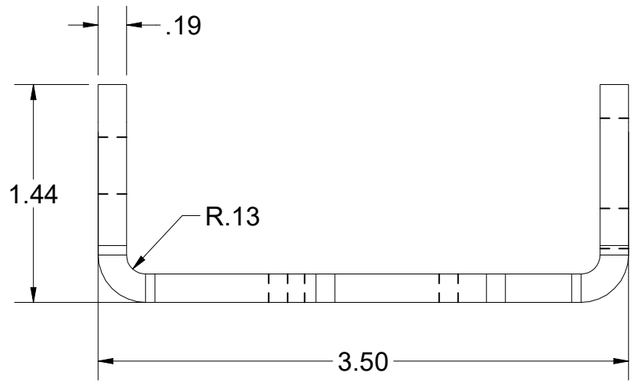

BEND TABLE				MATERIAL IFS: 100007734
BEND RADIUS	V-OPENING	BEND ANGLE	BEND DEDUCTION	MATERIAL THK: 0.1875
0.125	0.75	90	0.3040	MAT DESCRIPTION: STL ASTM A36 SM-HRPO 60X120 RAW .1875

Infrastructure
JENSEN
527 Dunn Circle, Sparks, NV 89431
775-352-2716 FAX: 755-358-8127
JENSENMETALTECH.COM

©2026 Jensen Infrastructure - All rights reserved.
All materials appearing as Jensen Infrastructure documents and the like are proprietary work product and are protected under U.S. copyright and other laws. Unless in conjunction with business conducted with Jensen Infrastructure , any use of Jensen Infrastructure work product without express, written consent is prohibited, and recipient is prohibited from distributing any and all work product to non-approved third parties under penalty of civil action.
This product shall only be produced in a Jensen Infrastructure facility.

NAME & DESCRIPTION:	200085963 Slam Latch Retainer		REV: F-1-5
WEIGHT: 0.506 lbmass		DRAWN BY: R. Dohr	SHEET: 6 OF 19
CREATED: 4/19/2022		MODIFIED: 2/26/2026	

200060977.idw

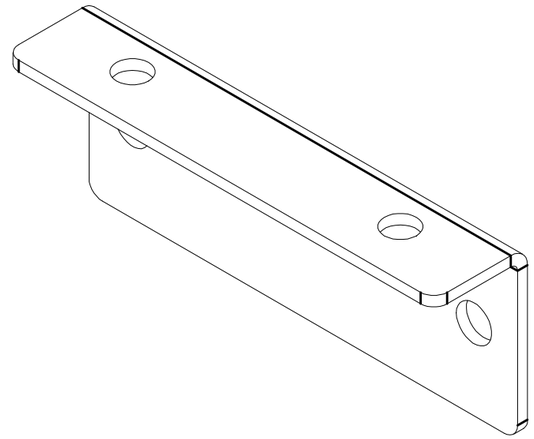

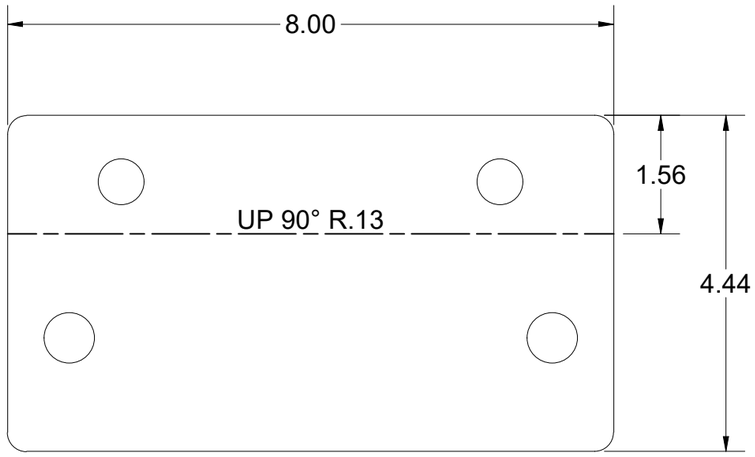

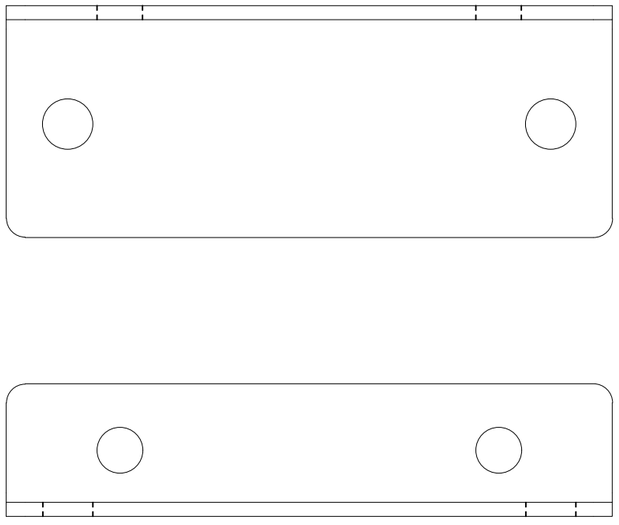

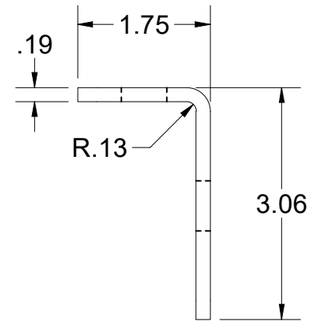

BEND TABLE				MATERIAL IFS: 100007734
BEND RADIUS	V-OPENING	BEND ANGLE	BEND DEDUCTION	MATERIAL THK: 0.1875
0.125	2	90	0.375	MAT DESCRIPTION: STL ASTM A36 SM-HRPO 60X120 RAW .1875

Infrastructure
JENSEN
527 Dunn Circle, Sparks, NV 89431
775-352-2716 FAX: 755-358-8127
JENSENMETALTECH.COM

©2026 Jensen Infrastructure - All rights reserved.
All materials appearing as Jensen Infrastructure documents and the like are proprietary work product and are protected under U.S. copyright and other laws. Unless in conjunction with business conducted with Jensen Infrastructure , any use of Jensen Infrastructure work product without express, written consent is prohibited, and recipient is prohibited from distributing any and all work product to non-approved third parties under penalty of civil action.
This product shall only be produced in a Jensen Infrastructure facility.

NAME & DESCRIPTION:		REV:
200087678 NAME PLATE FRAME ANGLE (FOR 2" FRAMES)		F-1-5
WEIGHT: 1.857 lbmass	DRAWN BY: R. Dohr	SHEET: 7 OF 19
CREATED: 4/19/2022	MODIFIED: 2/26/2026	

200060977.idw

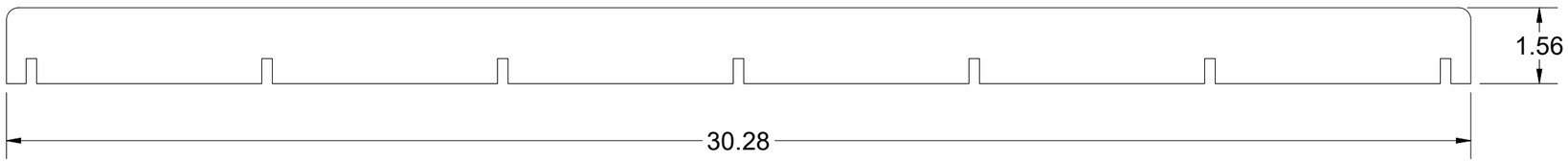

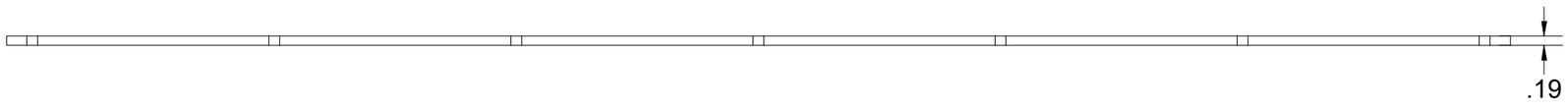

BEND TABLE				MATERIAL IFS: 100007734
BEND RADIUS	V-OPENING	BEND ANGLE	BEND DEDUCTION	MATERIAL THK: 0.1875
-	-	- 0	-	MAT DESCRIPTION: STL ASTM A36 SM-HRPO 60X120 RAW .1875

Infrastructure
JENSEN
527 Dunn Circle, Sparks, NV 89431
775-352-2716 FAX: 755-358-8127
JENSENMETALTECH.COM

©2026 Jensen Infrastructure - All rights reserved.
All materials appearing as Jensen Infrastructure documents and the like are proprietary work product and are protected under U.S. copyright and other laws. Unless in conjunction with business conducted with Jensen Infrastructure , any use of Jensen Infrastructure work product without express, written consent is prohibited, and recipient is prohibited from distributing any and all work product to non-approved third parties under penalty of civil action.
This product shall only be produced in a Jensen Infrastructure facility.

NAME & DESCRIPTION:		REV:
200088063 Door Component Steel Side Bar		F-1-5
WEIGHT: 2.473 lbmass	DRAWN BY: R. Dohr	SHEET: 8 OF 19
CREATED: 4/19/2022	MODIFIED: 2/26/2026	

200060977.idw

NOT SYMMETRICAL

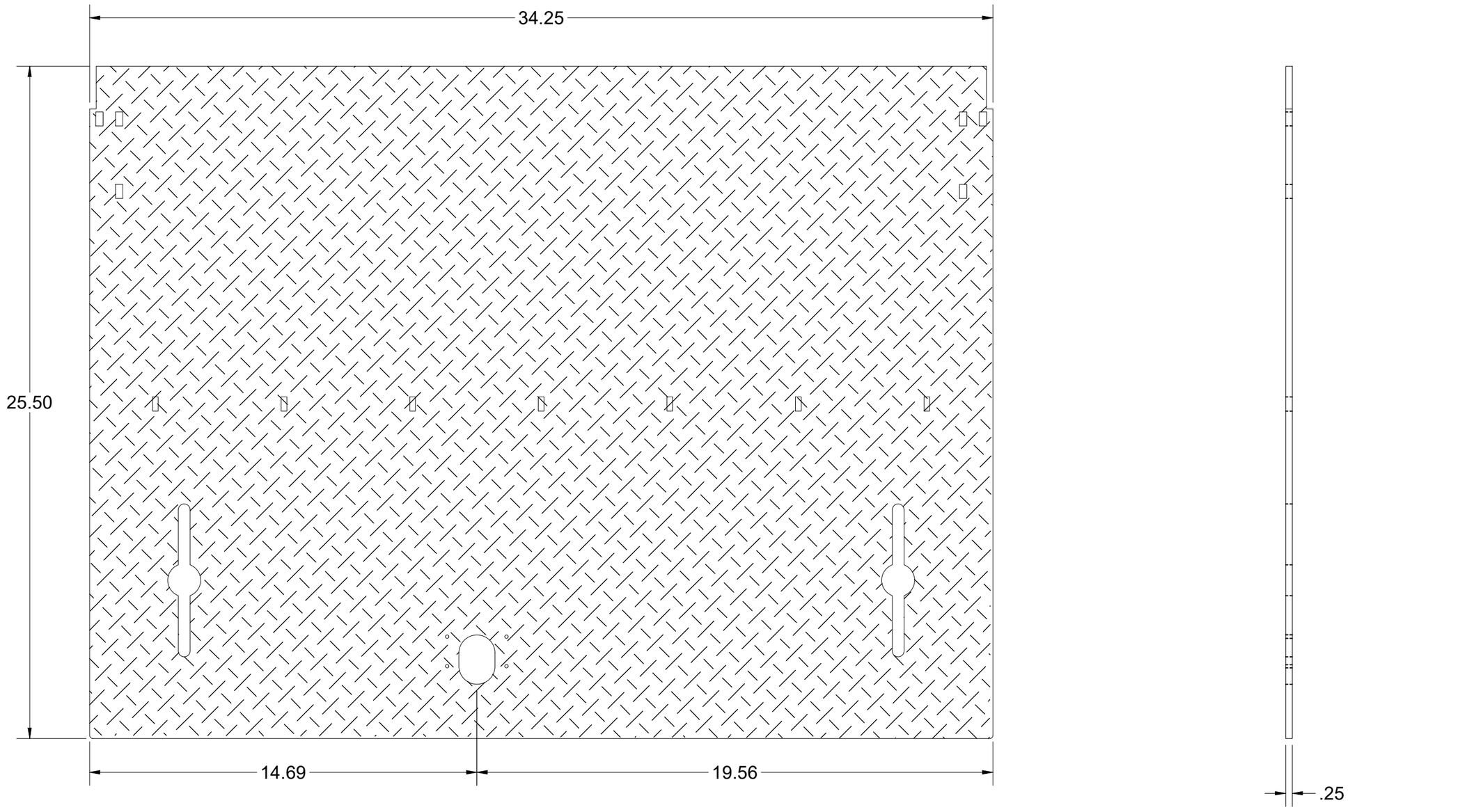

20006097.idw

BEND TABLE				MATERIAL IFS: 100007736
BEND RADIUS	V-OPENING	BEND ANGLE	BEND DEDUCTION	MATERIAL THK: 0.25
-	-	- 0	-	MAT DESCRIPTION: SHT STL CQ DP RAW .25 - 36 KSI YIELD

Infrastructure JENSEN

527 Dunn Circle, Sparks, NV 89431
775-352-2716 FAX: 755-358-8127
JENSENMETALTECH.COM

©2026 Jensen Infrastructure - All rights reserved. All materials appearing as Jensen Infrastructure documents and the like are proprietary work product and are protected under U.S. copyright and other laws. Unless in conjunction with business conducted with Jensen Infrastructure , any use of Jensen Infrastructure work product without express, written consent is prohibited, and recipient is prohibited from distributing any and all work product to non-approved third parties under penalty of civil action. This product shall only be produced in a Jensen Infrastructure facility.

NAME & DESCRIPTION: 200088064 Door Component Steel Plate, Top		REV: F-1-5
WEIGHT: 67.419 lbmass	DRAWN BY: R. Dohr	SHEET: 9 OF 19
CREATED: 4/19/2022	MODIFIED: 2/26/2026	

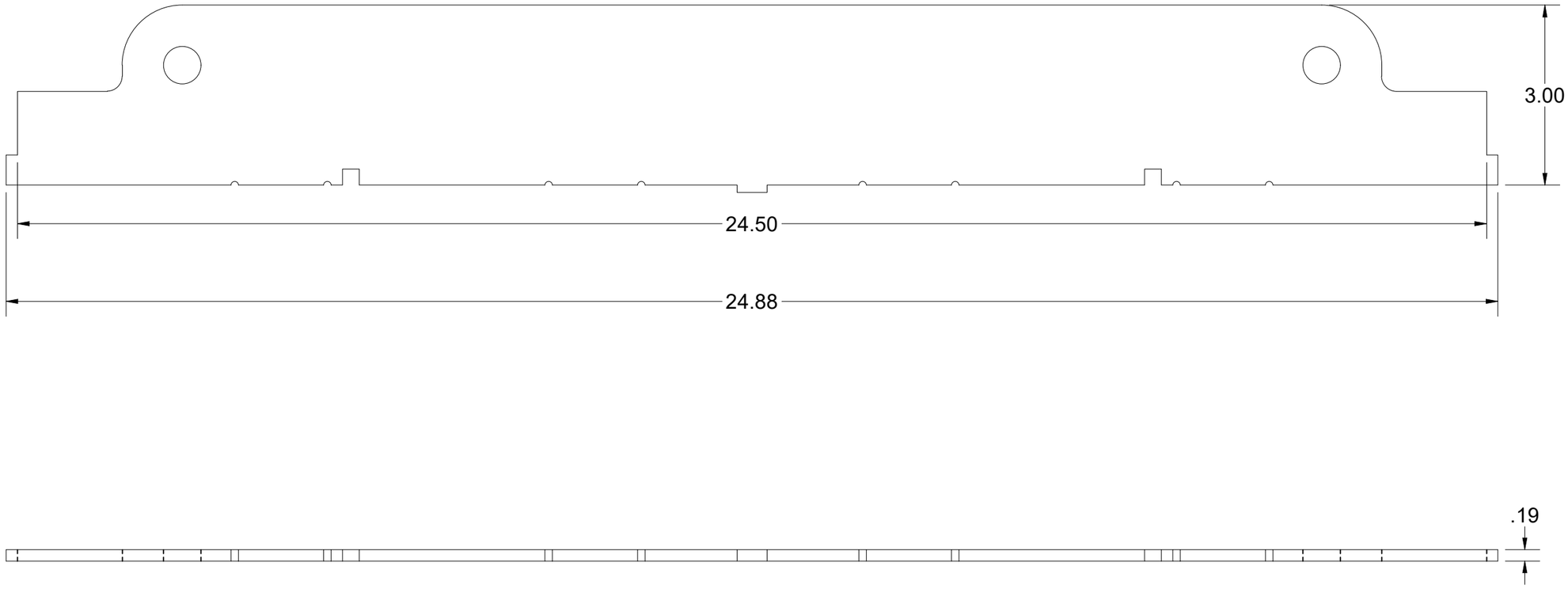

BEND TABLE				MATERIAL IFS: 100007821
BEND RADIUS	V-OPENING	BEND ANGLE	BEND DEDUCTION	MATERIAL THK: 0.1875
-	-	- 0	-	MAT DESCRIPTION: SHT STL GR80 SM-HRPO RAW .1875

Infrastructure
JENSEN
527 Dunn Circle, Sparks, NV 89431
775-352-2716 FAX: 755-358-8127
JENSENMETALTECH.COM

©2026 Jensen Infrastructure - All rights reserved.
All materials appearing as Jensen Infrastructure documents and the like are proprietary work product and are protected under U.S. copyright and other laws. Unless in conjunction with business conducted with Jensen Infrastructure , any use of Jensen Infrastructure work product without express, written consent is prohibited, and recipient is prohibited from distributing any and all work product to non-approved third parties under penalty of civil action.
This product shall only be produced in a Jensen Infrastructure facility.

NAME & DESCRIPTION: 200088065 Door Component Steel Stiffener, Plate		REV: F-1-5
WEIGHT: 3.590 lbmass	DRAWN BY: R. Dohr	SHEET: 10 OF 19
CREATED: 4/19/2022	MODIFIED: 2/26/2026	

200060977.idw

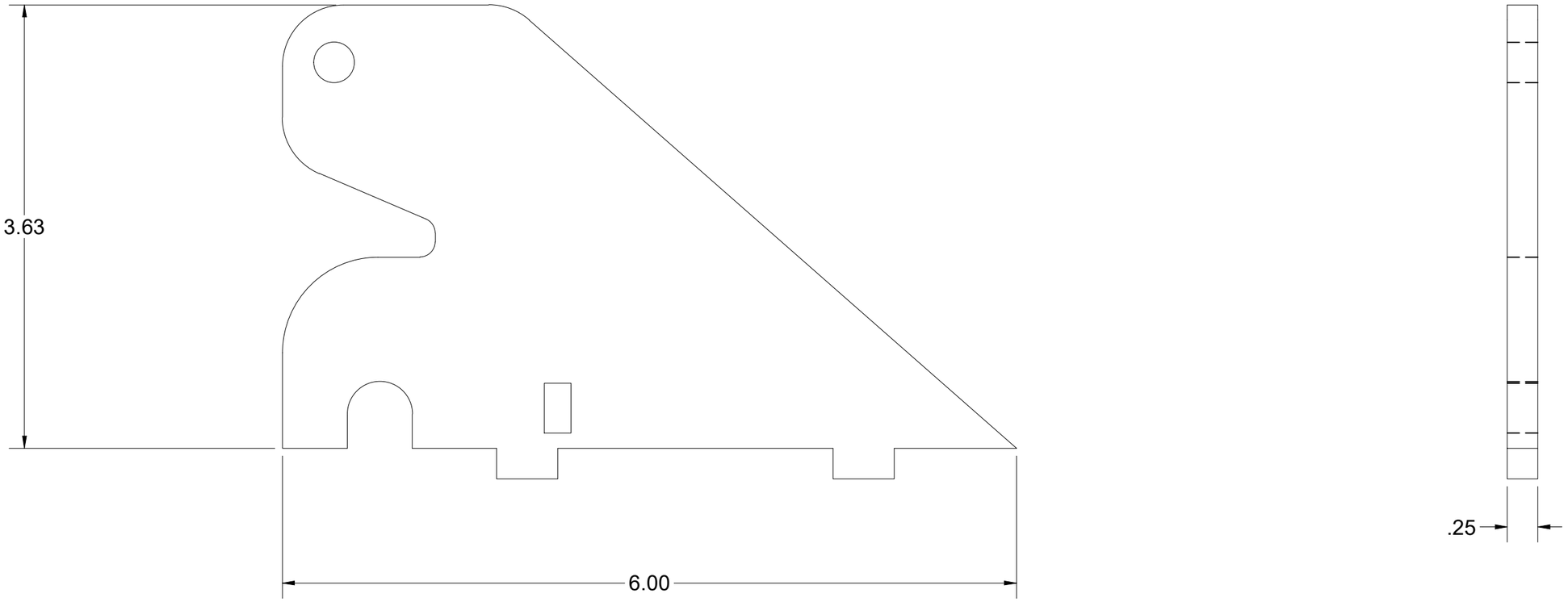

BEND TABLE				MATERIAL IFS: 100007735			
BEND RADIUS	V-OPENING	BEND ANGLE	BEND DEDUCTION	MATERIAL THK: 0.25			
-	-	- 0	-	MAT DESCRIPTION: STL ASTM A36 SM-HRPO RAW .250			

Infrastructure JENSEN
527 Dunn Circle, Sparks, NV 89431
775-352-2716 FAX: 755-358-8127
JENSENMETALTECH.COM

©2026 Jensen Infrastructure - All rights reserved.
All materials appearing as Jensen Infrastructure documents and the like are proprietary work product and are protected under U.S. copyright and other laws. Unless in conjunction with business conducted with Jensen Infrastructure , any use of Jensen Infrastructure work product without express, written consent is prohibited, and recipient is prohibited from distributing any and all work product to non-approved third parties under penalty of civil action.
This product shall only be produced in a Jensen Infrastructure facility.

NAME & DESCRIPTION: 200088066 Door Component Hinge		REV: F-1-5
WEIGHT: 0.937 lbmass	DRAWN BY: R. Dohr	SHEET: 11 OF 19
CREATED: 4/19/2022	MODIFIED: 2/26/2026	

200060977.idw

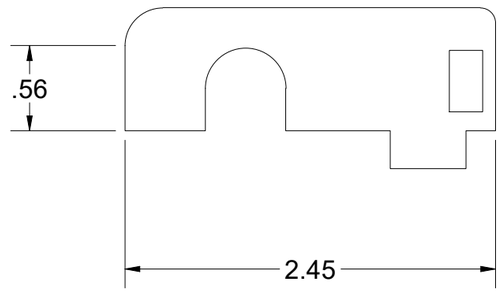

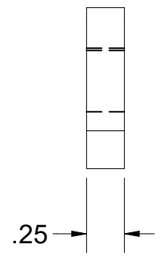

BEND TABLE				MATERIAL IFS: 100007735			
BEND RADIUS	V-OPENING	BEND ANGLE	BEND DEDUCTION	MATERIAL THK: 0.25			
-	-	-	-	MAT DESCRIPTION: STL ASTM A36 SM-HRPO RAW .250			

Infrastructure
JENSEN
527 Dunn Circle, Sparks, NV 89431
775-352-2716 FAX: 755-358-8127
JENSENMETALTECH.COM

©2026 Jensen Infrastructure - All rights reserved.
All materials appearing as Jensen Infrastructure documents and the like are proprietary work product and are protected under U.S. copyright and other laws. Unless in conjunction with business conducted with Jensen Infrastructure , any use of Jensen Infrastructure work product without express, written consent is prohibited, and recipient is prohibited from distributing any and all work product to non-approved third parties under penalty of civil action.
This product shall only be produced in a Jensen Infrastructure facility.

NAME & DESCRIPTION: 200088067 Door Component Hinge-Secondary		REV: F-1-5
WEIGHT: 0.124 lbmass	DRAWN BY: R. Dohr	SHEET: 12 OF 19
CREATED: 4/19/2022	MODIFIED: 2/26/2026	

200060977.idw

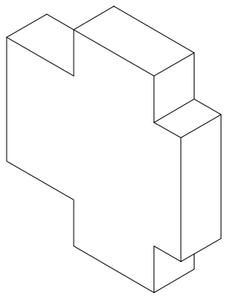

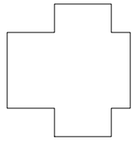

Base View
SCALE 1

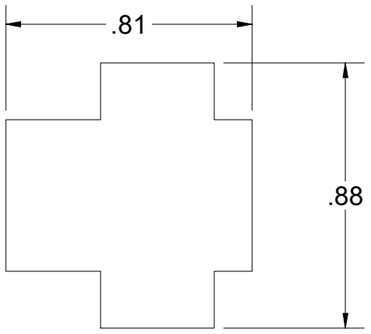

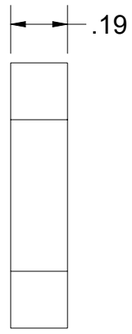

BEND TABLE				MATERIAL IFS: 100007734
BEND RADIUS	V-OPENING	BEND ANGLE	BEND DEDUCTION	MATERIAL THK: 0.1875
-	-	-	-	MAT DESCRIPTION: STL ASTM A36 SM-HRPO 60X120 RAW .1875

Infrastructure
JENSEN
527 Dunn Circle, Sparks, NV 89431
775-352-2716 FAX: 755-358-8127
JENSENMETALTECH.COM

©2026 Jensen Infrastructure - All rights reserved.
All materials appearing as Jensen Infrastructure documents and the like are proprietary work product and are protected under U.S. copyright and other laws. Unless in conjunction with business conducted with Jensen Infrastructure , any use of Jensen Infrastructure work product without express, written consent is prohibited, and recipient is prohibited from distributing any and all work product to non-approved third parties under penalty of civil action.
This product shall only be produced in a Jensen Infrastructure facility.

NAME & DESCRIPTION: 200092484 Hinge Doubler Coupling Plate		REV: F-1-5
WEIGHT: 0.029 lbmass	DRAWN BY: R. Dohr	SHEET: 13 OF 19
CREATED: 4/19/2022	MODIFIED: 2/26/2026	

200060977.idw

SYMMETRICAL

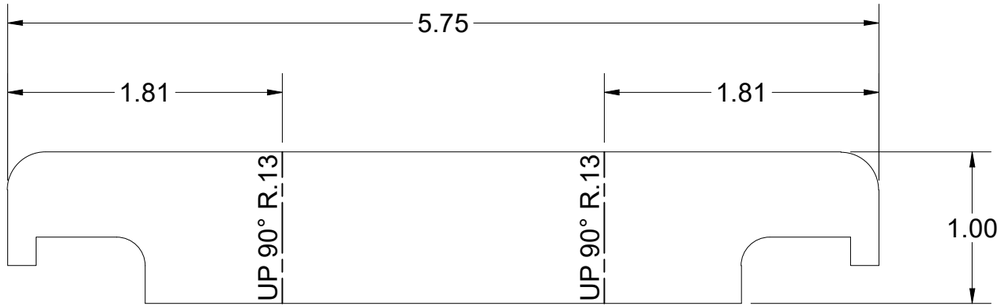

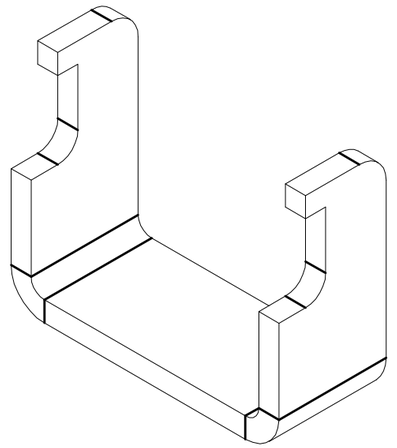



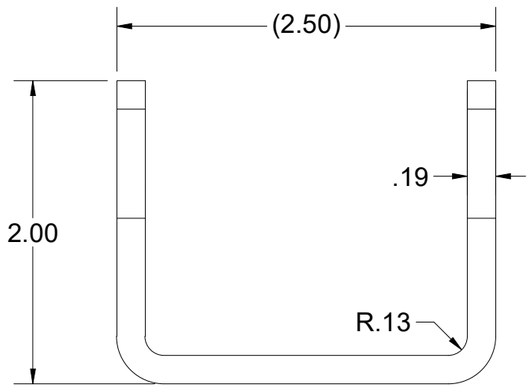

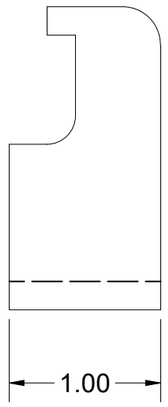

BEND TABLE				MATERIAL IFS: 100007734
BEND RADIUS	V-OPENING	BEND ANGLE	BEND DEDUCTION	MATERIAL THK: 0.1875
0.125	2	90	0.375	MAT DESCRIPTION: STL ASTM A36 SM-HRPO 60X120 RAW .1875

Infrastructure JENSEN
527 Dunn Circle, Sparks, NV 89431
775-352-2716 FAX: 755-358-8127
JENSENMETALTECH.COM

©2026 Jensen Infrastructure - All rights reserved.
All materials appearing as Jensen Infrastructure documents and the like are proprietary work product and are protected under U.S. copyright and other laws. Unless in conjunction with business conducted with Jensen Infrastructure , any use of Jensen Infrastructure work product without express, written consent is prohibited, and recipient is prohibited from distributing any and all work product to non-approved third parties under penalty of civil action.
This product shall only be produced in a Jensen Infrastructure facility.

NAME & DESCRIPTION:	200099056 SLAM LATCH CATCH FOR 2" FRAMES - PNW	REV:
WEIGHT: 0.277 lbmass	DRAWN BY: R. Dohr	SHEET: 14 OF 19
CREATED: 4/19/2022	MODIFIED: 2/26/2026	

200060977.idw

NOT SYMMETRICAL

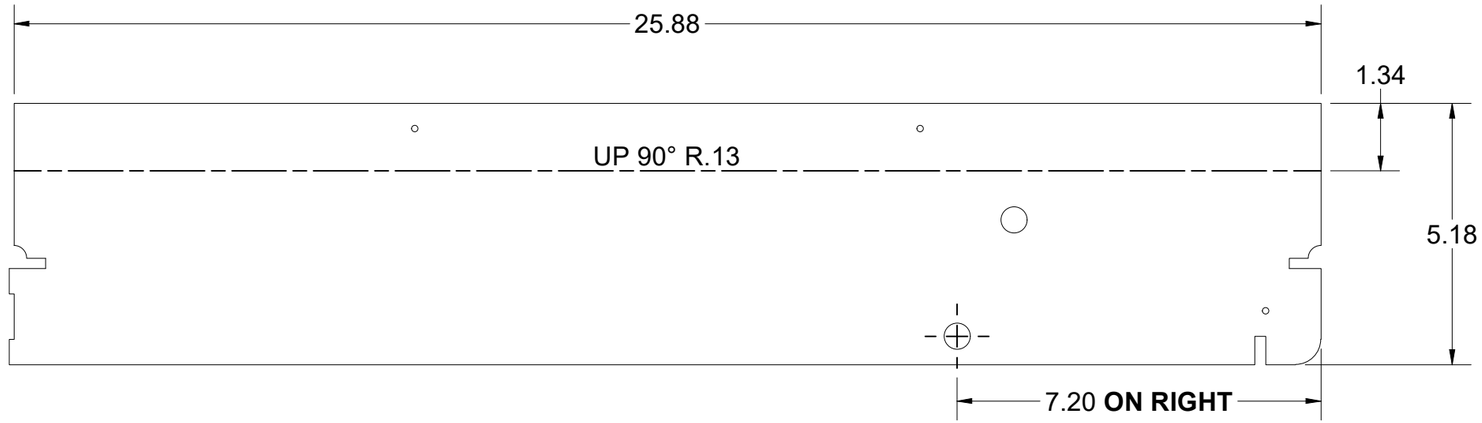

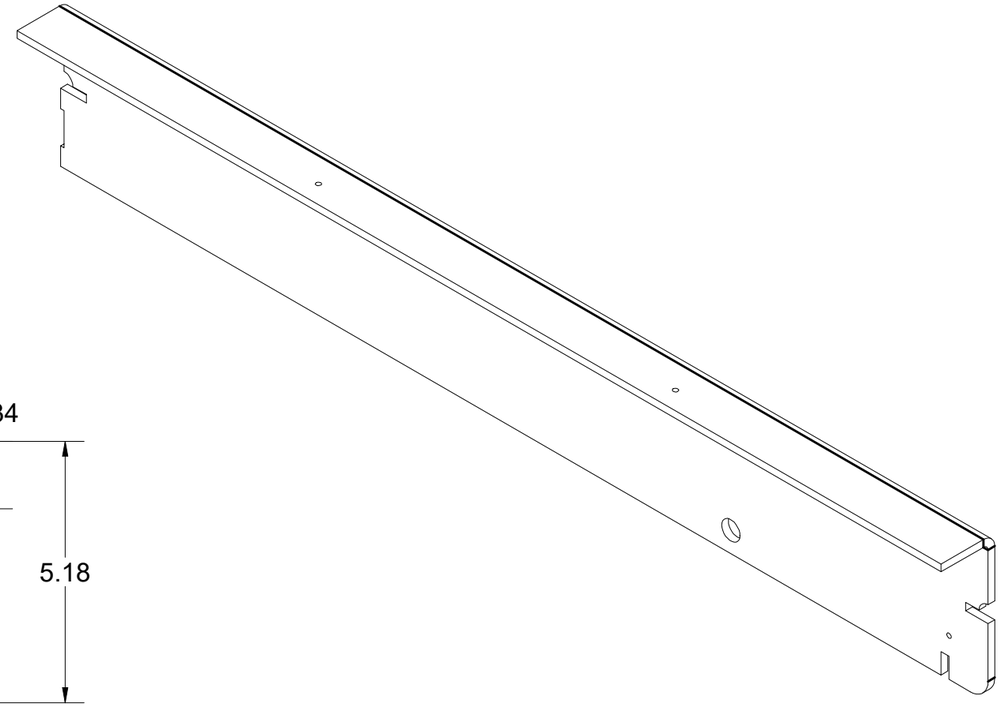

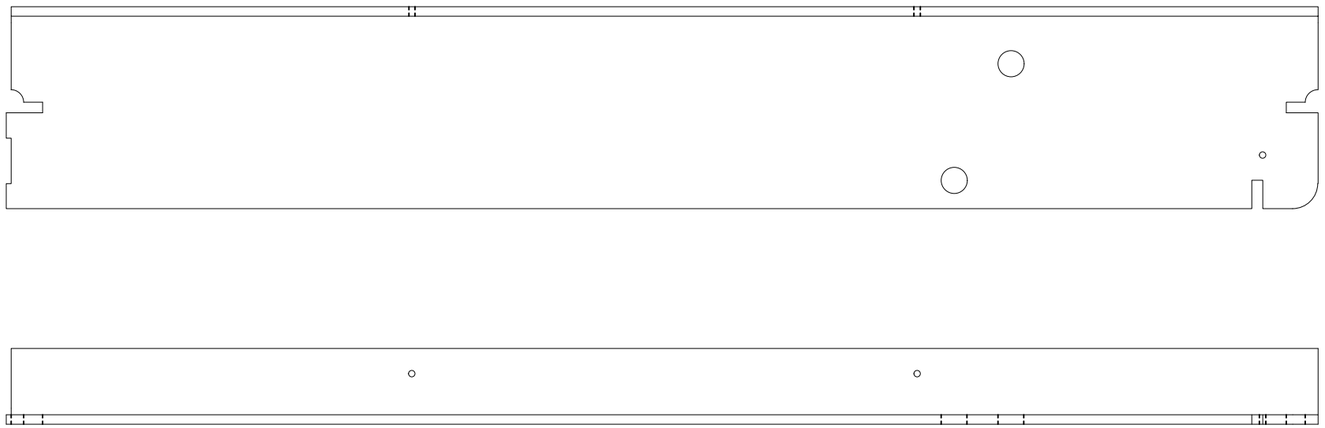

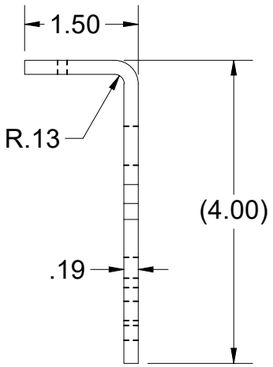

BEND TABLE				MATERIAL IFS: 100007734
BEND RADIUS	V-OPENING	BEND ANGLE	BEND DEDUCTION	MATERIAL THK: 0.1875
0.125	1	90	0.325	MAT DESCRIPTION: STL ASTM A36 SM-HRPO 60X120 RAW .1875

Infrastructure JENSEN
527 Dunn Circle, Sparks, NV 89431
775-352-2716 FAX: 755-358-8127
JENSENMETALTECH.COM

©2026 Jensen Infrastructure - All rights reserved.
All materials appearing as Jensen Infrastructure documents and the like are proprietary work product and are protected under U.S. copyright and other laws. Unless in conjunction with business conducted with Jensen Infrastructure , any use of Jensen Infrastructure work product without express, written consent is prohibited, and recipient is prohibited from distributing any and all work product to non-approved third parties under penalty of civil action.
This product shall only be produced in a Jensen Infrastructure facility.

NAME & DESCRIPTION: 200100364 Frame Component Steel Frame Side Left, Cast In		REV: F-1-5
WEIGHT: 7.133 lbmass	DRAWN BY: R. Dohr	SHEET: 15 OF 19
CREATED: 4/19/2022	MODIFIED: 2/26/2026	

20006097.idw

SYMMETRICAL

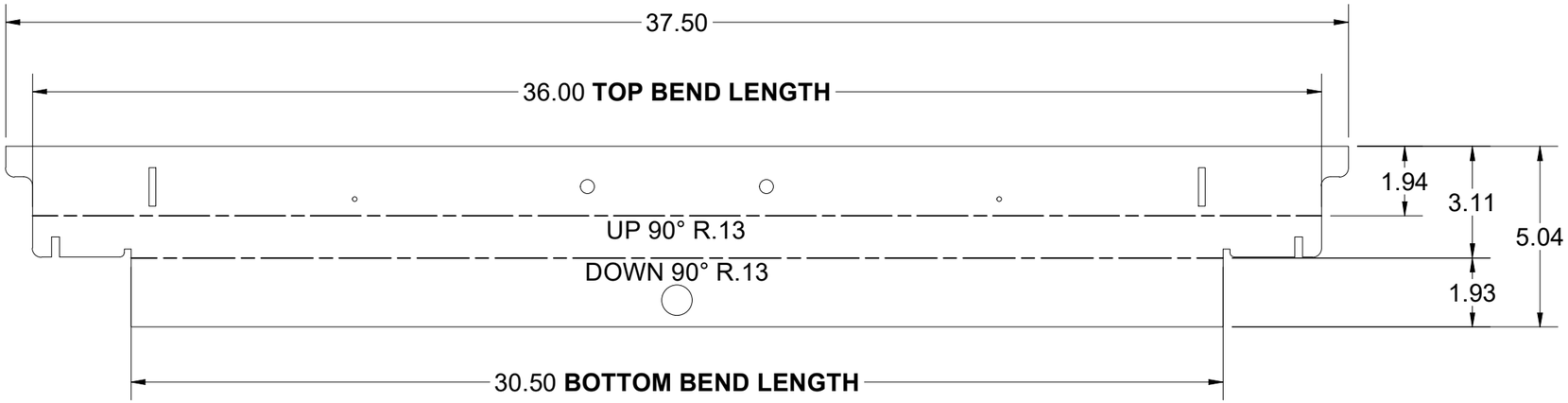

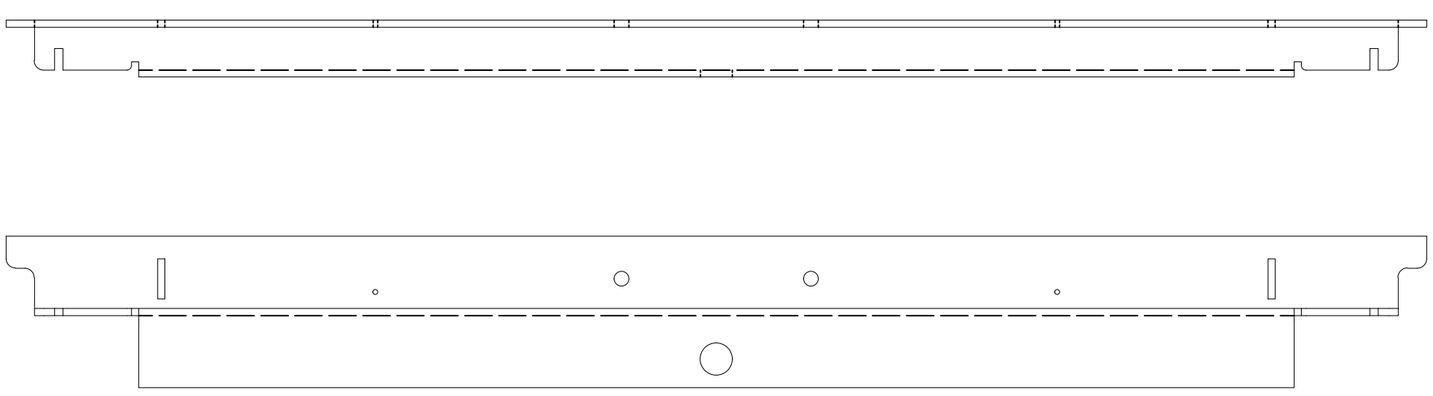

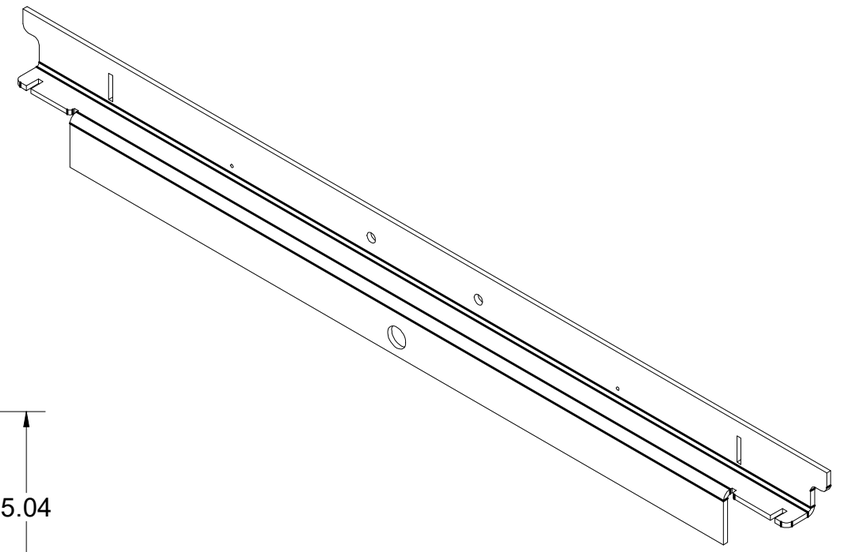

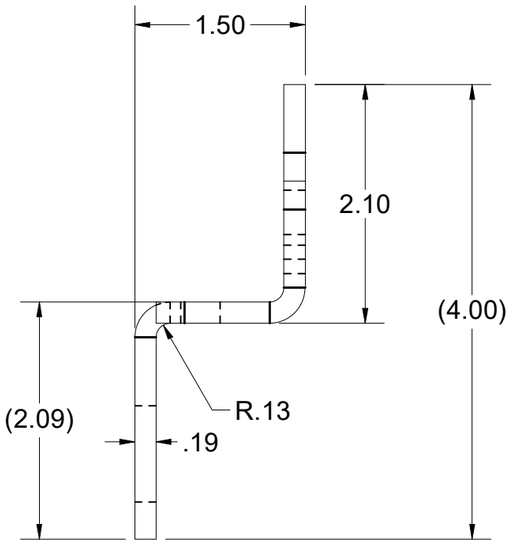

BEND TABLE				MATERIAL IFS: 100007734
BEND RADIUS	V-OPENING	BEND ANGLE	BEND DEDUCTION	MATERIAL THK: 0.1875
0.125	1	90	0.325	MAT DESCRIPTION: STL ASTM A36 SM-HRPO 60X120 RAW .1875

Infrastructure JENSEN
527 Dunn Circle, Sparks, NV 89431
775-352-2716 FAX: 755-358-8127
JENSENMETALTECH.COM

©2026 Jensen Infrastructure - All rights reserved. All materials appearing as Jensen Infrastructure documents and the like are proprietary work product and are protected under U.S. copyright and other laws. Unless in conjunction with business conducted with Jensen Infrastructure , any use of Jensen Infrastructure work product without express, written consent is prohibited, and recipient is prohibited from distributing any and all work product to non-approved third parties under penalty of civil action. This product shall only be produced in a Jensen Infrastructure facility.

NAME & DESCRIPTION: 200100365 Frame Component Steel Frame End, Cast In		REV: F-1-5
WEIGHT: 9.211 lbmass	DRAWN BY: R. Dohr	SHEET: 16 OF 19
CREATED: 4/19/2022	MODIFIED: 2/26/2026	

20006097.idw

SYMMETRICAL

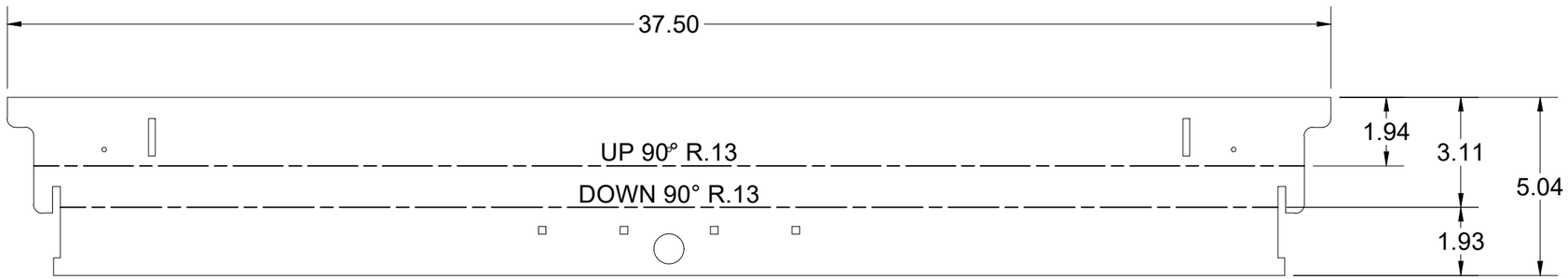

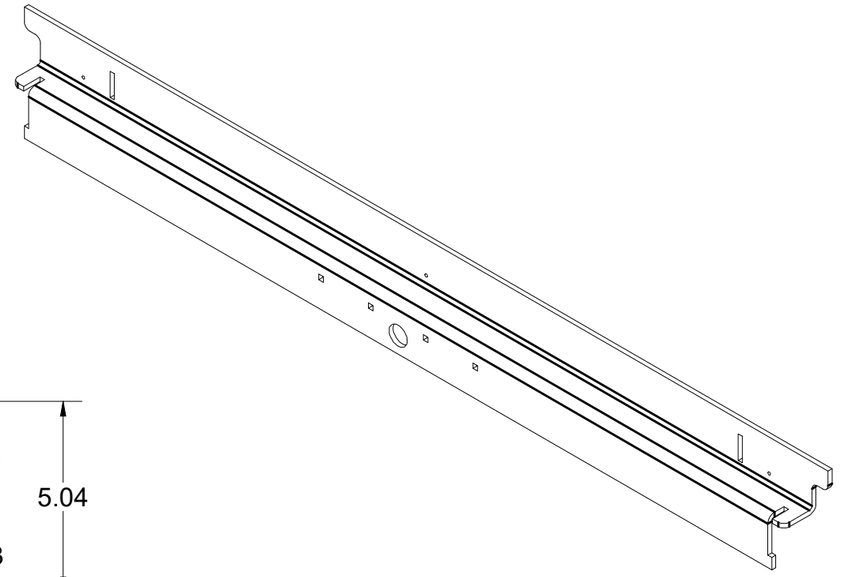

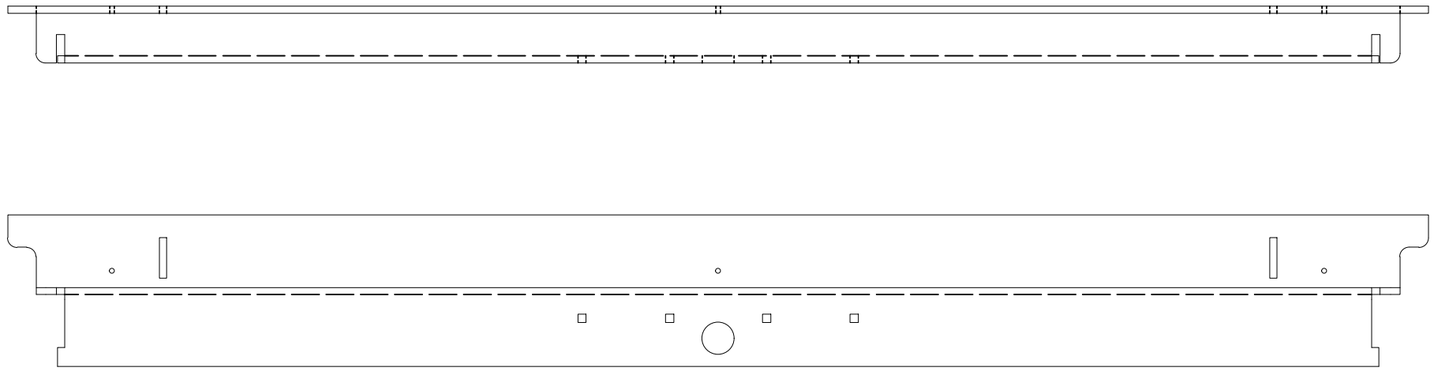

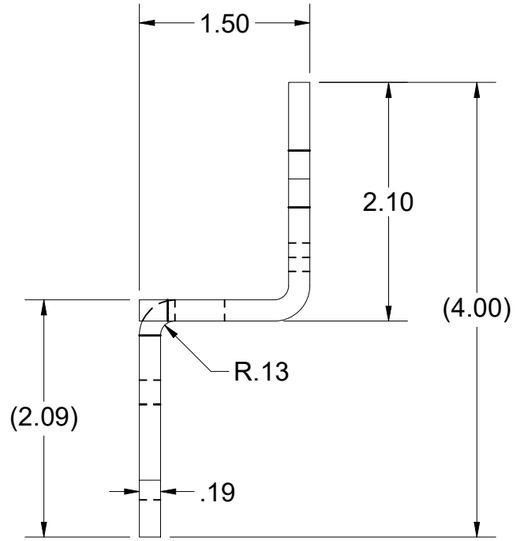

BEND TABLE			
BEND RADIUS	V-OPENING	BEND ANGLE	BEND DEDUCTION
0.125	1	90	0.325

MATERIAL IFS: 100007734

MATERIAL THK: 0.1875

MAT DESCRIPTION: STL ASTM A36 SM-HRPO 60X120 RAW .1875

Infrastructure JENSEN

527 Dunn Circle, Sparks, NV 89431
775-352-2716 FAX: 755-358-8127
JENSENMETALTECH.COM

©2026 Jensen Infrastructure - All rights reserved. All materials appearing as Jensen Infrastructure documents and the like are proprietary work product and are protected under U.S. copyright and other laws. Unless in conjunction with business conducted with Jensen Infrastructure , any use of Jensen Infrastructure work product without express, written consent is prohibited, and recipient is prohibited from distributing any and all work product to non-approved third parties under penalty of civil action. This product shall only be produced in a Jensen Infrastructure facility.

NAME & DESCRIPTION: 200100366 Frame Component Steel Frame Front, Cast In

REV: F-1-5

WEIGHT: 9.662 lbmass

DRAWN BY: R. Dohr

SHEET: 17 OF 19

CREATED: 4/19/2022

MODIFIED: 2/26/2026

20006097.idw

NOT SYMMETRICAL

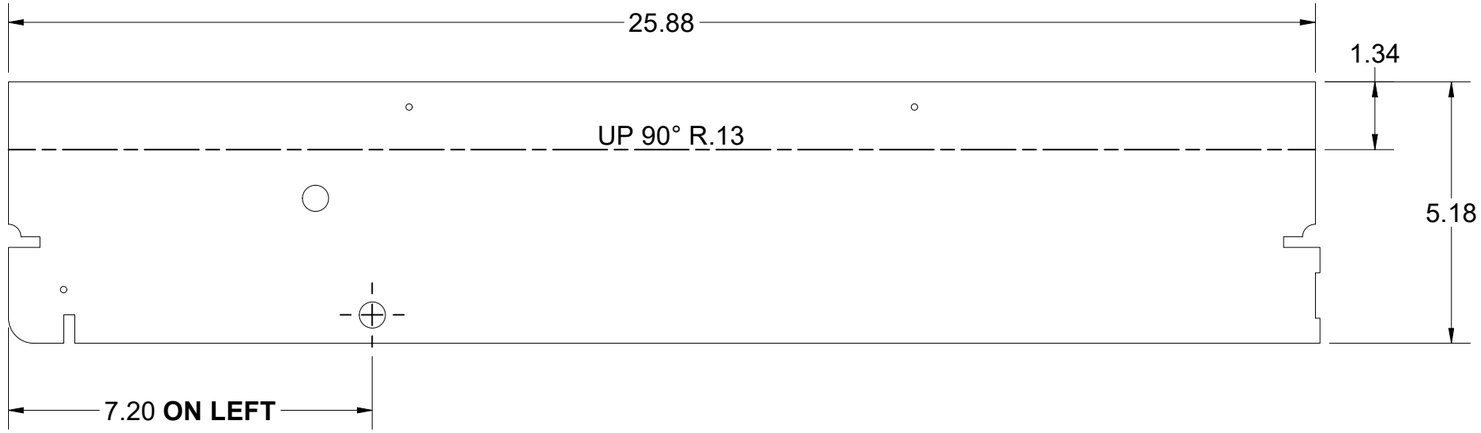

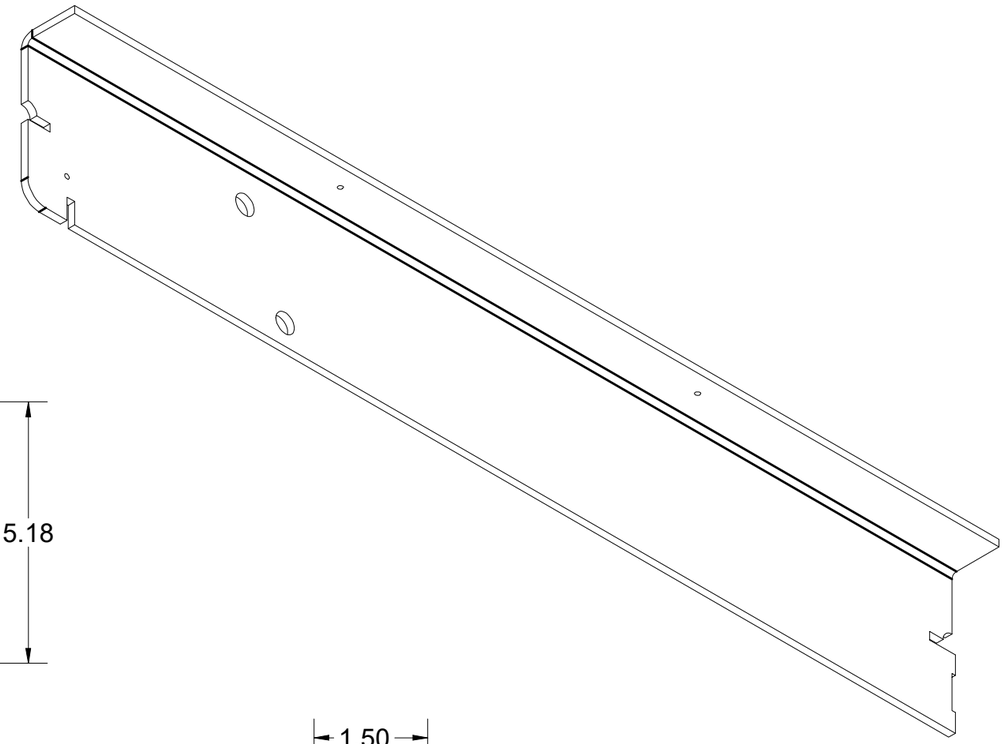

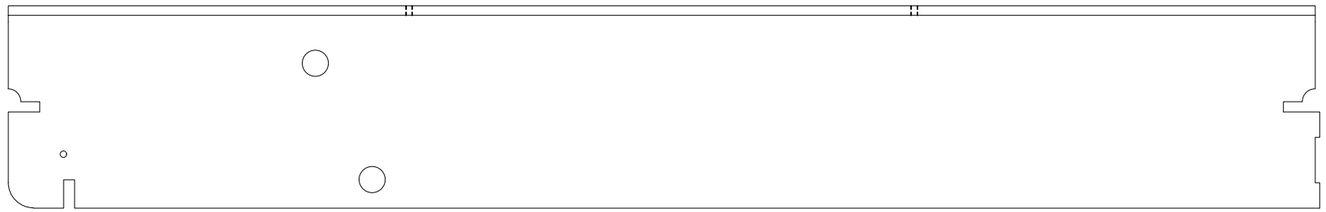



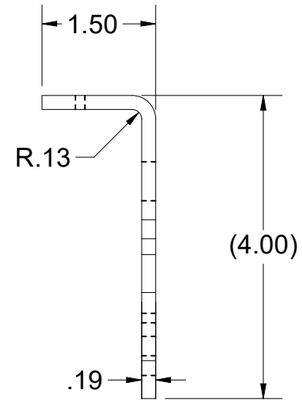

BEND TABLE				MATERIAL IFS: 100007734
BEND RADIUS	V-OPENING	BEND ANGLE	BEND DEDUCTION	MATERIAL THK: 0.1875
0.125	1	90	0.325	MAT DESCRIPTION: STL ASTM A36 SM-HRPO 60X120 RAW .1875

Infrastructure JENSEN
527 Dunn Circle, Sparks, NV 89431
775-352-2716 FAX: 755-358-8127
JENSENMETALTECH.COM

©2026 Jensen Infrastructure - All rights reserved. All materials appearing as Jensen Infrastructure documents and the like are proprietary work product and are protected under U.S. copyright and other laws. Unless in conjunction with business conducted with Jensen Infrastructure , any use of Jensen Infrastructure work product without express, written consent is prohibited, and recipient is prohibited from distributing any and all work product to non-approved third parties under penalty of civil action. This product shall only be produced in a Jensen Infrastructure facility.

NAME & DESCRIPTION: 200100367 Frame Component Steel Frame Side Right, Cast In		REV: F-1-5
WEIGHT: 7.133 lbmass	DRAWN BY: R. Dohr	SHEET: 18 OF 19
CREATED: 4/19/2022	MODIFIED: 2/26/2026	

20006097.idw

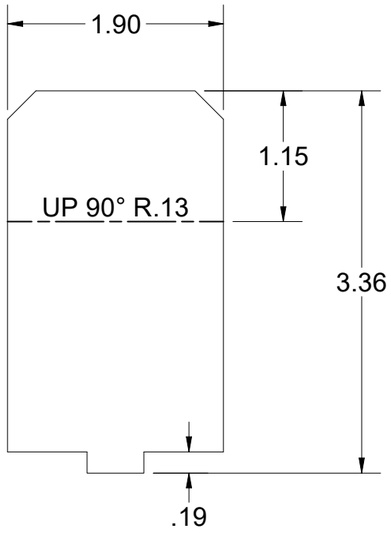

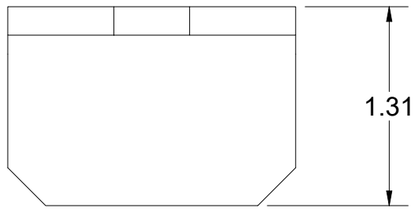

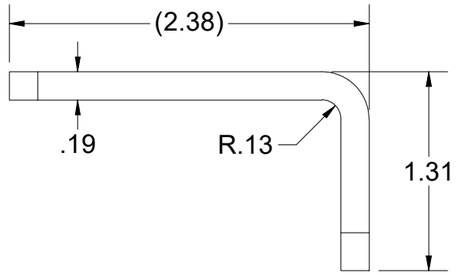

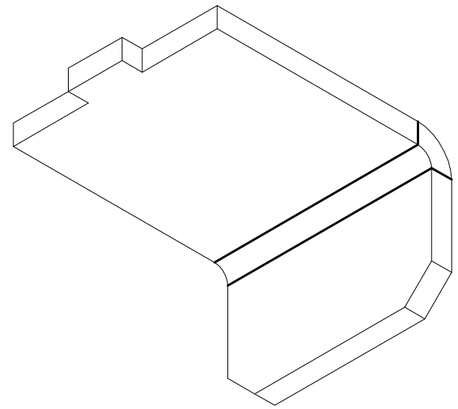

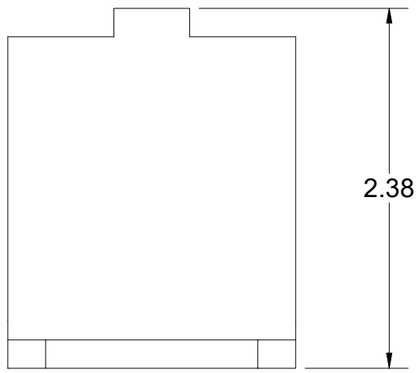

BEND TABLE				MATERIAL IFS: 100007734
BEND RADIUS	V-OPENING	BEND ANGLE	BEND DEDUCTION	MATERIAL THK: 0.1875
0.125	1	90	0.325	MAT DESCRIPTION: STL ASTM A36 SM-HRPO 60X120 RAW .1875

Infrastructure
JENSEN
527 Dunn Circle, Sparks, NV 89431
775-352-2716 FAX: 755-358-8127
JENSENMETALTECH.COM

©2026 Jensen Infrastructure - All rights reserved.
All materials appearing as Jensen Infrastructure documents and the like are proprietary work product and are protected under U.S. copyright and other laws. Unless in conjunction with business conducted with Jensen Infrastructure , any use of Jensen Infrastructure work product without express, written consent is prohibited, and recipient is prohibited from distributing any and all work product to non-approved third parties under penalty of civil action.
This product shall only be produced in a Jensen Infrastructure facility.

NAME & DESCRIPTION:		REV:
200100368 Frame Component Steel Skirt Extension		F-1-5
WEIGHT: 0.327 lbmass	DRAWN BY: R. Dohr	SHEET: 19 OF 19
CREATED: 4/19/2022	MODIFIED: 2/26/2026	

200060977.idw