NOTES
■ STRUCTURAL DESIGN IS BASED ON 300 PSF EQUIPMENT LOADING AND 80 PSF LATERAL PRESSURE FROM HS20 TRAFFIC.
■ DESIGNED TO MEET SPECIFICATIONS OF SNOHOMISH PUBLIC UTILITY DISTRICT (SnoPUD). NOT YET APPROVED BY AGENCY.
■ FOR COMPLETE DESIGN AND PRODUCT INFORMATION CONTACT JENSEN PRECAST.

BILL OF MATERIALS

ITEM	UNIT QTY	QTY	PART NUMBER	DESCRIPTION
1	1	1	200058484	Pad Mount Vault 4242x26.5 2125"E
2	1	1	200060941	Pad 4242x6 2125"E

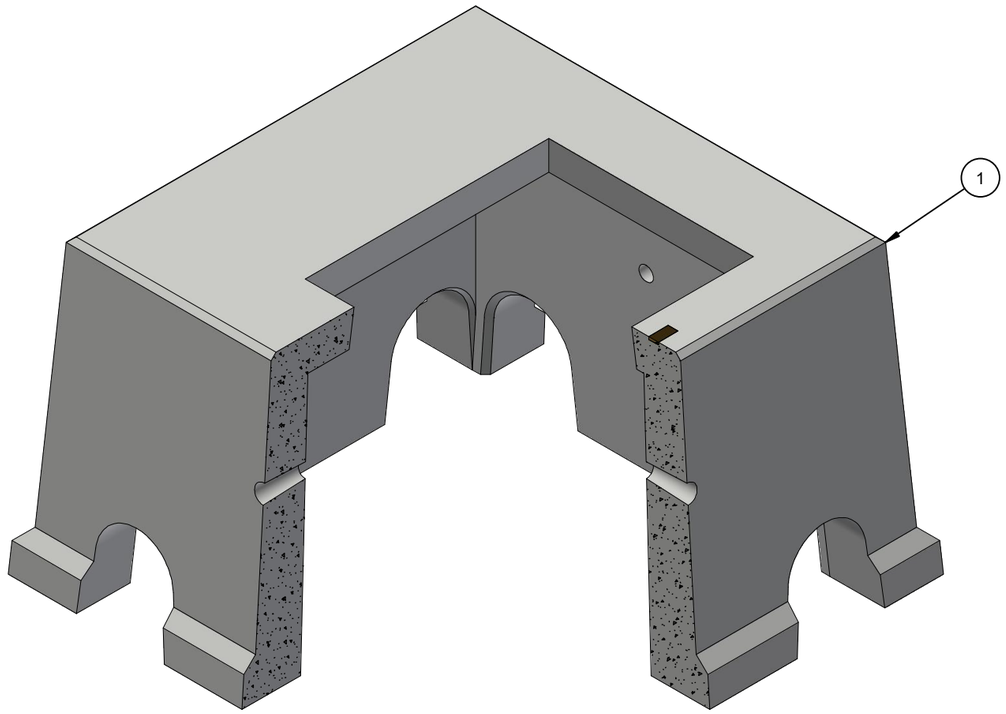

ISO LAYOUT

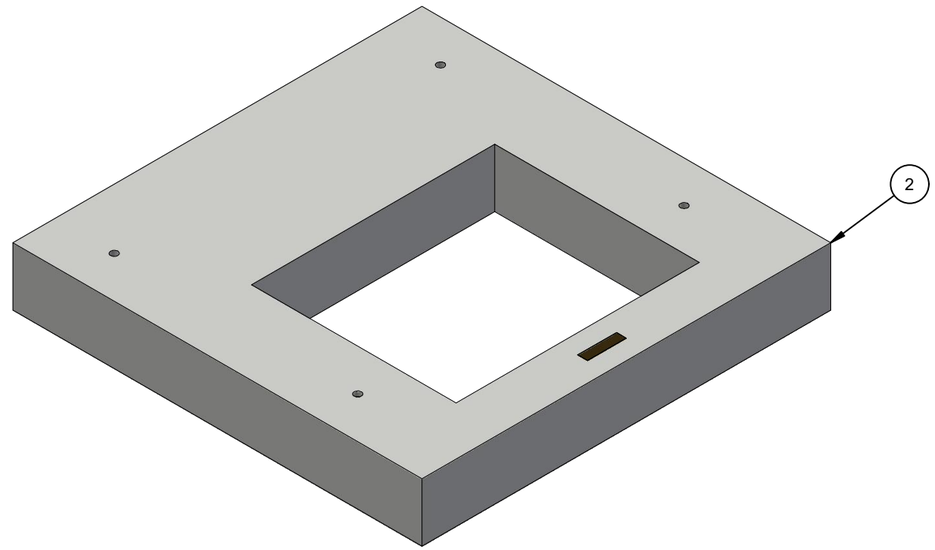

ISO LAYOUT
(OPTIONAL 6" RISER PAD)

CHANGE HISTORY			
NO.	DESCRIPTION	DATE	BY
1	DRAWING CREATED	3/3/2022	T.Larson

BURY DEPTH:	0.0' - 1.0' to Top		
WATER LEVEL:	5.0'	APPROX. WEIGHT:	2455.93 Lbs
DESIGN SPEC:	ASTM C857,ACI 318	LOADING SPEC:	300 psf Equipment
AGENCY:		AGENCY SPEC:	

JENSEN PRECAST EST. 1968

WWW.JENSENPRECAST.COM

©2022 Jensen Precast- All rights reserved.
All materials appearing as Jensen Precast documents and the like are proprietary work product and are protected under U.S. copyright and other laws.
Unless in conjunction with business conducted with Jensen Precast, any use of Jensen Precast work product without express, written consent is prohibited, and recipient is prohibited from distributing any and all work product to non-approved third parties under penalty of civil action.

DESCRIPTION:	Pad Mount Vault 4242 Layout Assembly LAYOUT REVIEW		REV: A-4
PART NUMBER:	200060942	DRAWN BY:	E. Fine
CREATED:	3/3/2022	MODIFIED:	9/6/2022
			SHEET: 1 OF 2

200060942.idw

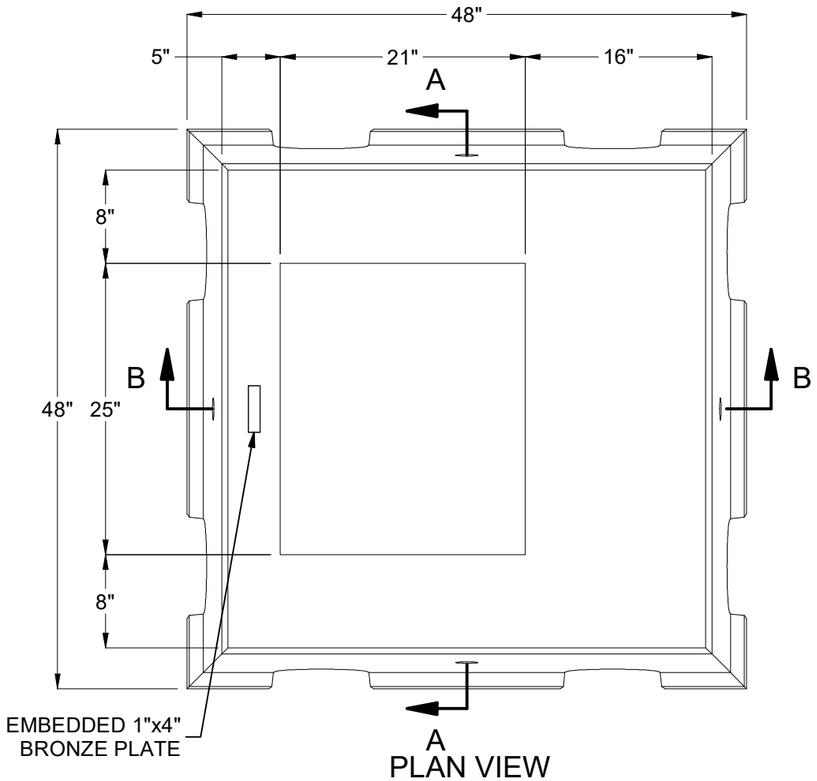

PLAN VIEW

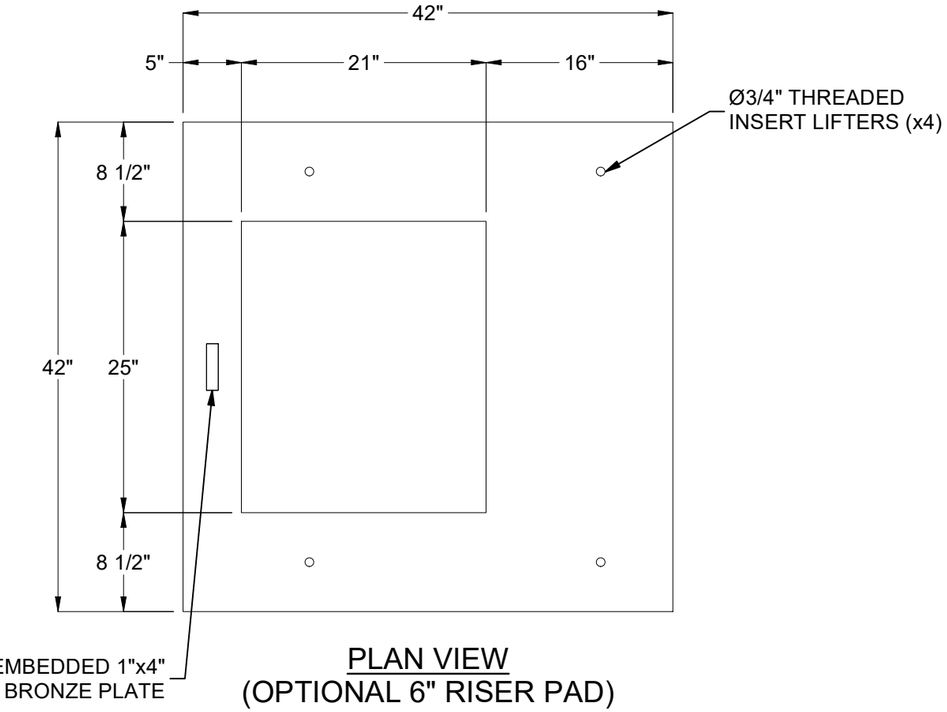

PLAN VIEW
(OPTIONAL 6" RISER PAD)

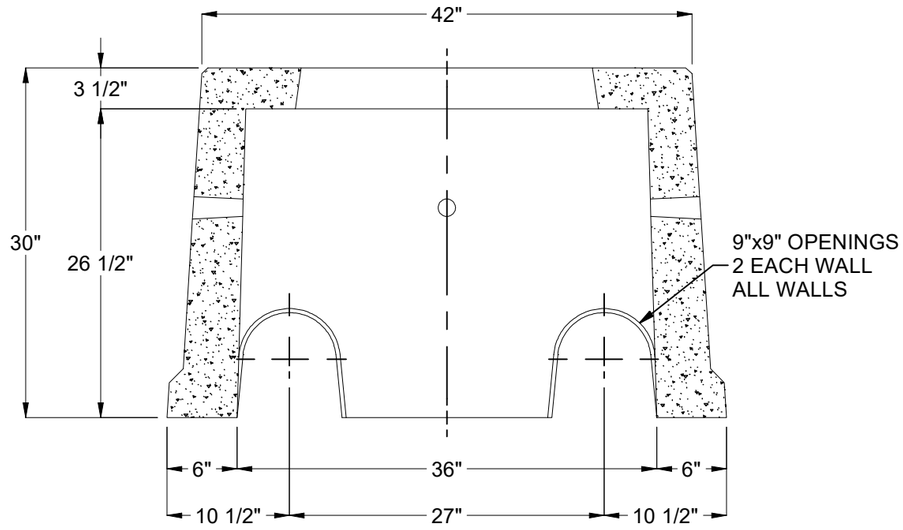

SECTION A-A
(OPPOSITE SIDE SIMILAR)

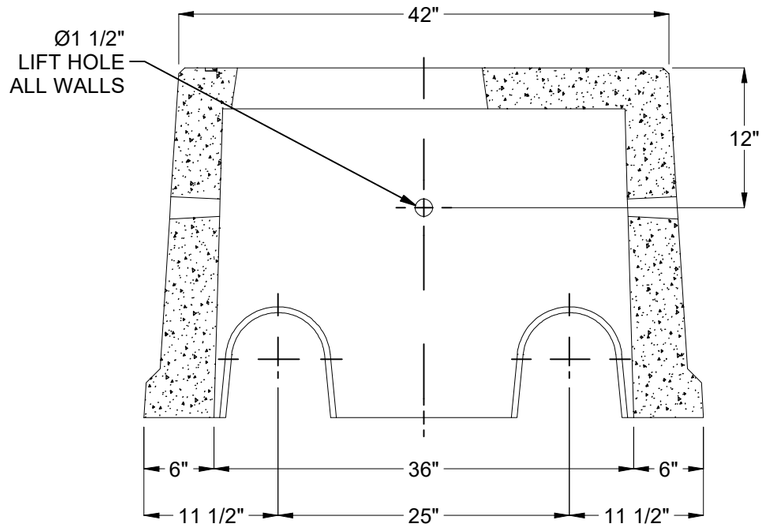

SECTION B-B
(OPPOSITE SIDE SIMILAR)

BURY DEPTH:	0.0' - 1.0' to Top		
WATER LEVEL:	5.0'	APPROX. WEIGHT:	2455.93 Lbs
DESIGN SPEC:	ASTM C857,ACI 318	LOADING SPEC:	300 psf Equipment
AGENCY:		AGENCY SPEC:	

JENSEN PRECAST EST. 1968

WWW.JENSENPRECAST.COM

©2022 Jensen Precast- All rights reserved.
All materials appearing as Jensen Precast documents and the like are proprietary work product and are protected under U.S. copyright and other laws.
Unless in conjunction with business conducted with Jensen Precast, any use of Jensen Precast work product without express, written consent is prohibited, and recipient is prohibited from distributing any and all work product to non-approved third parties under penalty of civil action.

DESCRIPTION:	Pad Mount Vault 4242 Layout Assembly LAYOUT DRAWING		REV: A-4
PART NUMBER:	200060942	DRAWN BY:	E. Fine
CREATED:	3/3/2022	MODIFIED:	9/6/2022
			SHEET: 2 OF 2

200060942.idw