BILL OF MATERIALS

ITEM	UNIT QTY	QTY	PART NUMBER	DESCRIPTION
1	1	1	100012389	Vault Neck 4848x12 LADWP
2	1	1	100012398	Plug Cover 4848x8 Slab Top 30"C LADWP 1-802 G-1B R-1581
3	1	1	100006916	CI COVER 30DIA NF 1581-0049 ASTM A48 CL35B PH B/D LADWP ELECTRIC
4	1	4	100022412	PENTA BOLT 5/8-11 UNC 1-5/8 HD 304SS
5	1	4	100008123	PLUG VN CONCRETE SLAB PLASTIC
6	1	1	100008122	PLUG PICKHOLE NEOPRENE RUBBER CI COVER ED/LA

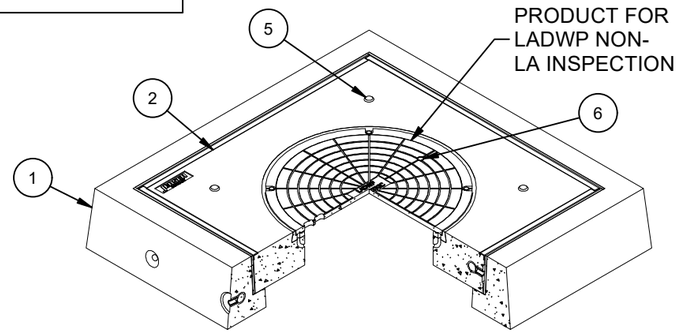

ISO VIEW

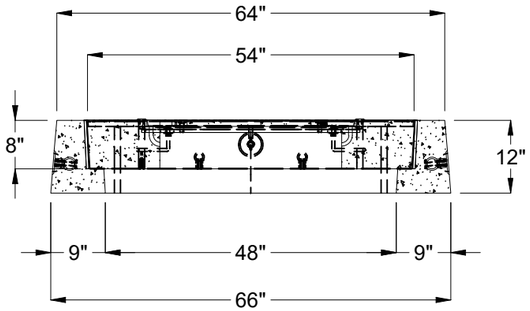

SECTION A-A

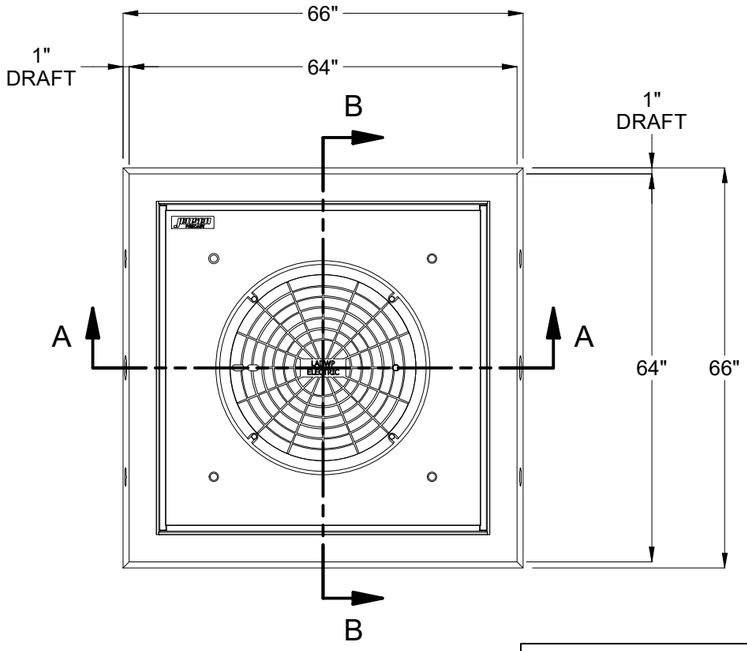

PLAN VIEW

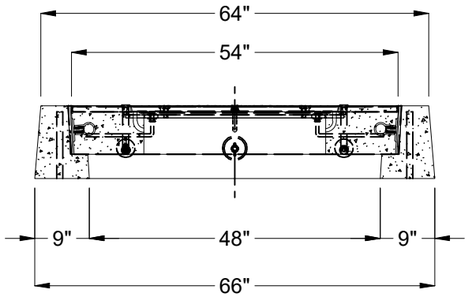

SECTION B-B

NOTES:

- STANDARDS. AASHTO LRFD BRIDGE DESIGN SPECIFICATIONS, 8TH EDITION, WITH 2022 CALTRANS AMENDMENTS, CITY OF LOS ANGELES BUREAU OF ENGINEERING STANDARD PLAN S-601-3, P178-R8 WHERE APPLICABLE, MANUAL PART H, ASTM C-857. STRUCTURAL CALCS. #33389 & 33389A.
- MATERIAL. CONCRETE, F'c=5,500 PSI. MIX TO INCLUDE FLY ASH AND DCI. REINFORCEMENT PER ASTM A-706, Fy=60,000.
- LOADS. VERTICAL LIVE LOAD: AASHTO HL-93, INCLUDING GREATER OF HS-20 TRUCK, TANDEM, OR PERMIT. LIVE LOAD SURCHARGE PER LA BOE PART H, FIGURE H 374.2A. SOIL LATERAL LOADS: 40 PCF (DRY), 81 PCF (SATURATED). SEE VAULT OR MANHOLE DRAWING FOR SOIL BEARING CAPACITY INFORMATION. DESIGN SOIL DENSITY IS 120 PCF.
- LOADS NOT INCLUDED. DESIGN DOES NOT INCLUDE COOPER E-80 RAILROAD LOADS OR LATERAL OR SURCHARGE LOADS THAT ARE PRODUCED BY FOOTING OR FOUNDATIONS ADJACENT TO THE STRUCTURE. THIS SUBSTRUCTURE SHALL BE KEPT AT LEAST IN A 1:1 RATIO AWAY FROM ALL FOOTINGS AND FOUNDATIONS, UNLESS THE ENGINEER OF RECORD APPROVES IN WRITING.
- INSTALLATION LIMITS OF CONCRETE EXTENSIONS IS 5'-0" DEEP.
- EACH CONCRETE SECTION SHALL BE MARKED ON THE INSIDE & OUTSIDE WITH "JENSEN PRECAST", THE DESIGNATION "DWP/FA-CN" AND THE DATE OF THE POUR.
- "JENSEN", THE YEAR, AND THE DESIGNATION "FA-CN" SHALL BE CAST IN THE TOP OF THE NECK, THE SIDE OF THE COVER, AND ON THE INSIDE OF THE EXTENSIONS.
- EACH PIECE TO BE STENCILIED WITH ITS PART NO.
- BROOM FINISH ON COVER MUST HAVE AND MAINTAIN A MINIMUM OF 0.6 SLIP RESISTANCE AND/OR 0.35 SKID RESISTANCE PER S-601-3.
- EXTENSIONS MAY BE REUSED IF UNDAMAGED.
- ADDITIONAL SUBMITTAL, PERMIT AND CONSTRUCTION PLAN REVIEW WILL BE REQUIRED FOR EACH PROJECT LOCATION. SUBMIT TO CITY ENGINEER FOR APPROVAL PRIOR TO START OF ANY CONSTRUCTION.
- ALL INSTALLATIONS SHALL COMPLY WITH ALL OTHER LOCAL GOVERING CODES AND REGULATIONS INCLUDING CALIFORNIA PUBLIC UTILITIES COMMISSION REGULATIONS.
- INSTALLATION OF NECK AND EXTENSIONS PER LADWP 1-802.

REVISION HISTORY			
REV	DESCRIPTION	DATE	APPROVED
E	MOVED PERIMETER FRAME TO CAGE DRAWING	5/1/2025	

BURY DEPTH:	0.0' - 0.0' to Top		
WATER LEVEL:	3.0'	APPROX. WEIGHT:	3367.48 Lbs
DESIGN SPEC:	AASHTO LRFD	LOADING SPEC:	AASHTO HL-93
AGENCY:	LADWP	AGENCY SPEC:	1-802 G-1B R-1581

Infrastructure
JENSEN
WWW.JENSENPRECAST.COM

©2025 Jensen Infrastructure - All rights reserved.
All materials appearing as Jensen Infrastructure documents and the like are proprietary work product and are protected under U.S. copyright and other laws.
Unless in conjunction with business conducted with Jensen Infrastructure any use of Jensen Infrastructure work product without express, written consent is prohibited, and recipient is prohibited from distributing any and all work product to non-approved third parties under penalty of civil action. This product shall only be produced in a Jensen Infrastructure facility.

DESCRIPTION: Vault Neck and Plug Cover Assembly 4848x12 30"C LADWP 1-802 G-1B R-1581

LAYOUT REVIEW

REV: E-2

PART NUMBER:	200060771	DRAWN BY:	J. Prado
CREATED:	10/26/2018	MODIFIED:	5/1/2025

SHEET: 1 OF 1

200060771.idw