BILL OF MATERIALS

ITEM	QTY	PART NUMBER	DESCRIPTION
1	1	200044196	HPC 1212 Polymer Cover, Tier-15, Bolt Down, Blank
2	1	200036300	HPC 1212x12 Polymer Box 1/2-13 SS Nut
3	2	100004339	BOLT HEX 1/2-13 UNC 2 304SS
4	2	100007767	WASHER FLAT 1/2 REGULAR 1.25 OD 304SS

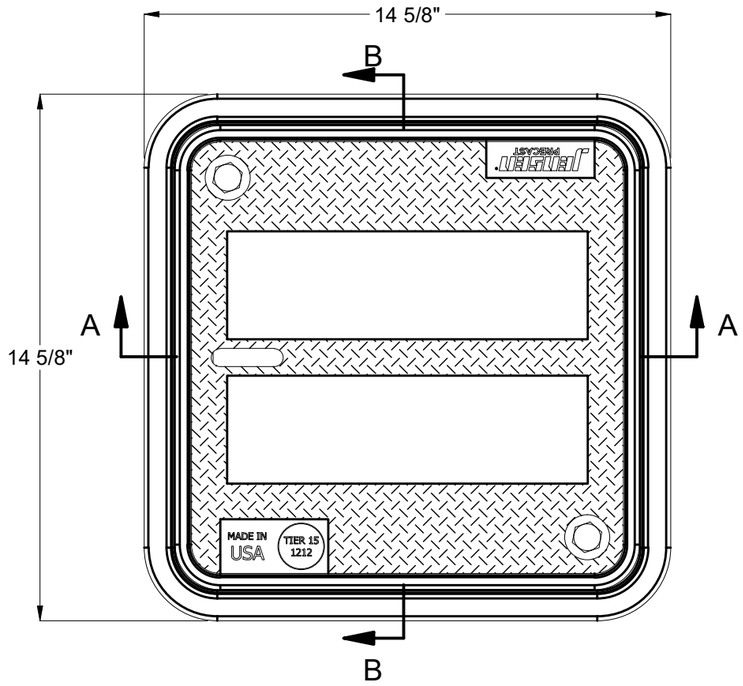

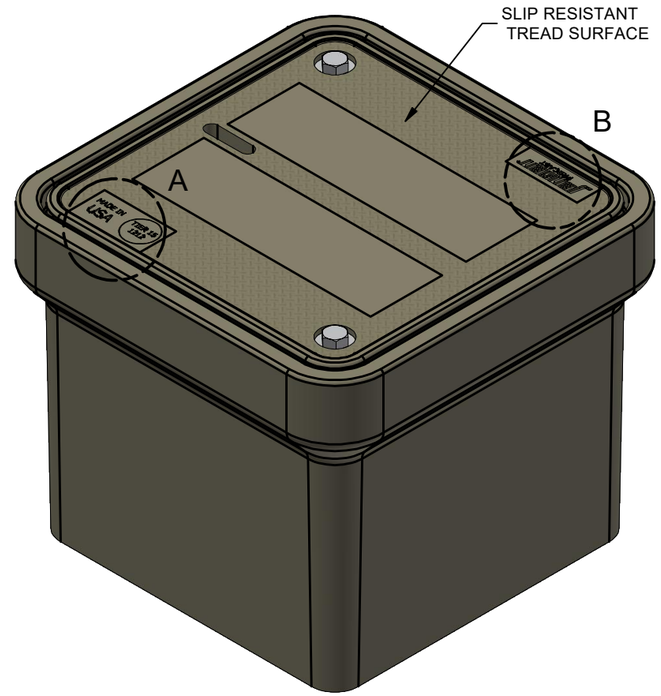

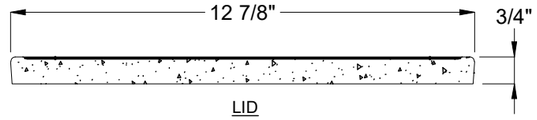

LID

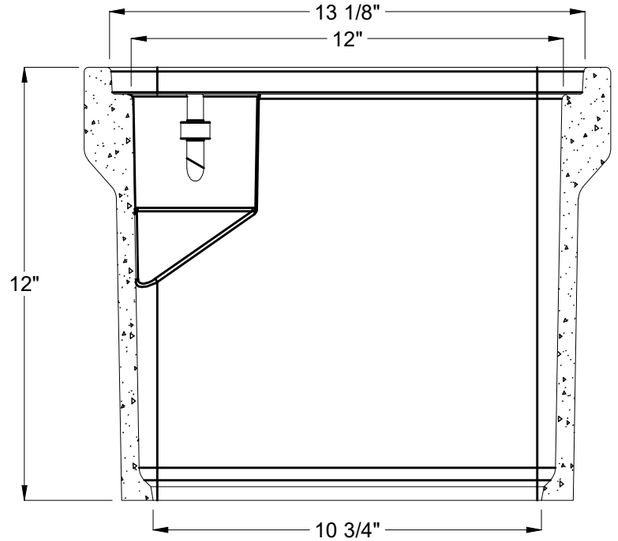

SECTION A-A

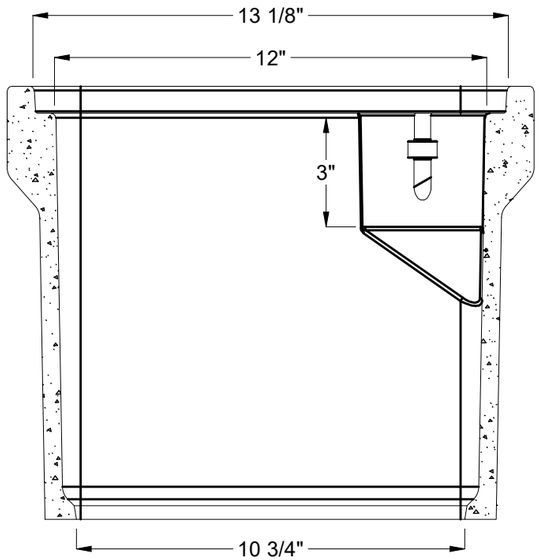

SECTION B-B



DETAIL A



DETAIL B

PALLET QUANTITY:	36	APPROX. WEIGHT:	39.89 lbs
CERTIFICATION:		DESIGN/TEST LOAD:	15/22.5 kip
DESIGN SPEC:	ANSI/SCTE 77	LOADING SPEC:	Tier-15
AGENCY:		AGENCY SPEC:	

JENSEN PRECAST EST. 1968

WWW.JENSENPRECAST.COM

©2018 Jensen Precast- All rights reserved.
All materials appearing as Jensen Precast documents and the like are proprietary work product and are protected under U.S. copyright and other laws.
Unless in conjunction with business conducted with Jensen Precast, any use of Jensen Precast work product without express, written consent is prohibited, and recipient is prohibited from distributing any and all work product to non-approved third parties under penalty of civil action.

DESCRIPTION:	HPC 1212x12 Polymer Assembly, Tier-15, 1/2-13 SS Nut, Blank		REV: A-1
PART #:	200059177	DRAWN BY:	T.Larson
CREATED:	10/6/2020	MODIFIED:	11/3/2022
			SHEET: 1 OF 1

200059177.idw