NOTES
■ FOR COMPLETE DESIGN AND PRODUCT INFORMATION CONTACT JENSEN PRECAST.

BILL OF MATERIALS

ITEM	UNIT QTY	QTY	PART NUMBER	DESCRIPTION
1	20.187 ft^3	20.187 ft^3	100011425	CONCRETE MIX GENERIC 5000 PSI
2	1	8	100002867	ANCHOR DOGBONE P52 2T X 3-3/8" GALV
3	1	48	100003011	TERMINATOR DUCT WITH SEAL 3IN SHORT T3000
4	1	4	100005910	PULL IRON CABLE 9X27 MB BPI-1
5	24.000 in	96.000 in	100024617	STRUT C-CHANNEL CONCRETE INSERT 1-5/8 X 1-3/8 12GA W/ANCHORS GALV
6	1	1	200059148	REINFORCING MAT 200059148

ALTERNATE WWR REINFORCING OPTION	
PART NUMBER	DESCRIPTION
200073246	REINFORCING MAT 200073246

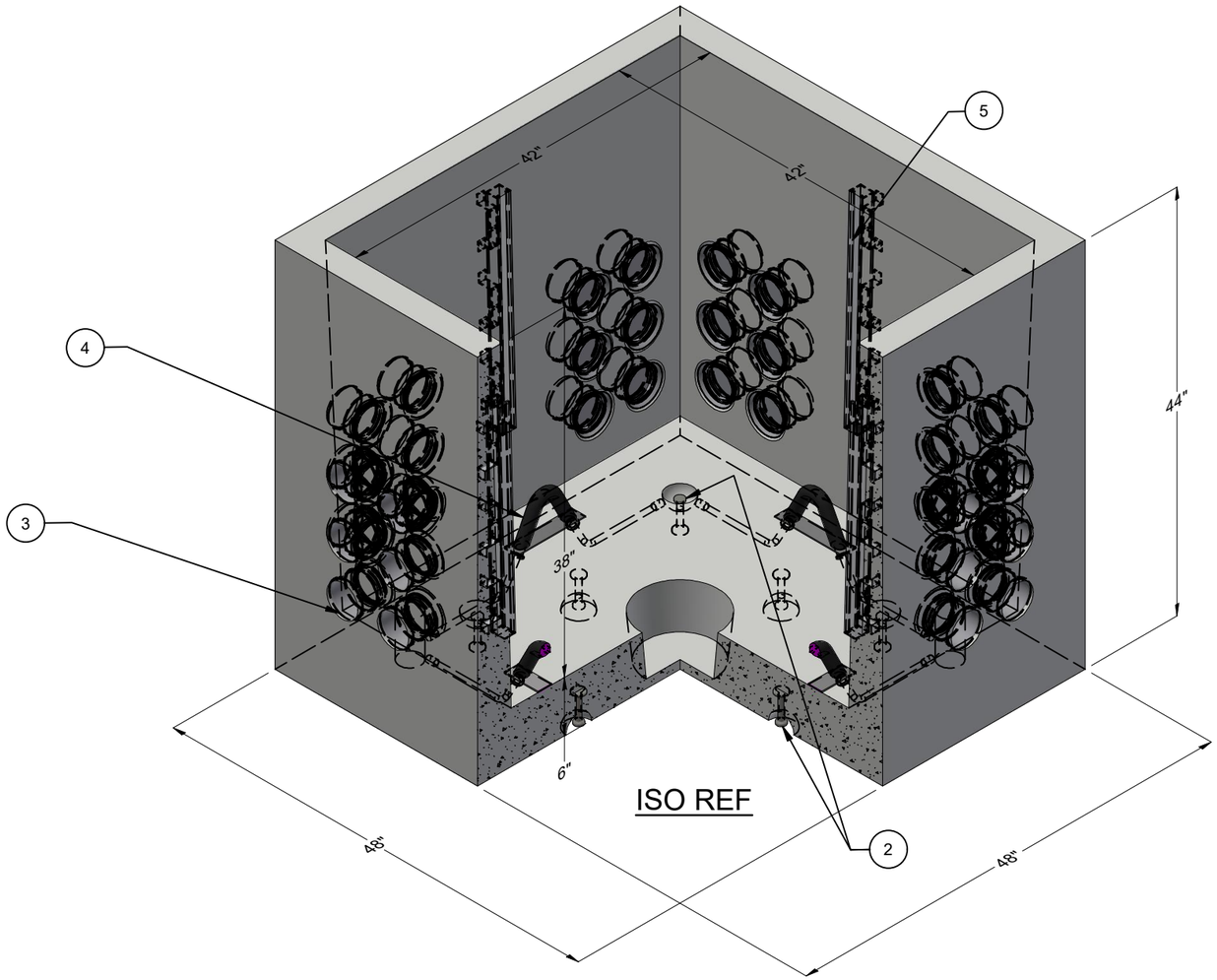

ISO REF

LIFTING NOTES
■ THIS CONCRETE PRODUCT IS DESIGNED TO BE LIFTED AT 2750 PSI WITH 4 LIFT CONNECTIONS EQUALLY LOADED TO 2 LIFTING POINTS AT A MINIMUM 60° SLING ANGLE, MEASURED FROM HORIZONTAL.

BURY DEPTH:	0.7' - 2.8' to Top		
WATER LEVEL:	Below Structure	APPROX. WEIGHT:	3085.88 Lbs
DESIGN SPEC:	ASTM C857,ACI 318	LOADING SPEC:	A-16 (AASHTO HS20-44)
REINFORCEMENT TYPE:	Rebar	LIFTING TYPE:	None

JENSEN PRECAST EST. 1968

WWW.JENSENPRECAST.COM

©2023 Jensen Precast- All rights reserved.
All materials appearing as Jensen Precast documents and the like are proprietary work product and are protected under U.S. copyright and other laws.
Unless in conjunction with business conducted with Jensen Precast, any use of Jensen Precast work product without express, written consent is prohibited, and recipient is prohibited from distributing any and all work product to non-approved third parties under penalty of civil action.

CHANGE HISTORY			
NO.	DESCRIPTION	DATE	BY
1	2112-52027	12-15-21	DCH

DESCRIPTION: Vault 4242x38 Rect. Bottom Section Terminators Sump

CASTING LAYOUT

REV: A-2

SHEET: 1 OF 2

PART NUMBER:	200059147	DRAWN BY:	MLR
CREATED:	9/7/2016	MODIFIED:	3/3/2023

200059147.idw

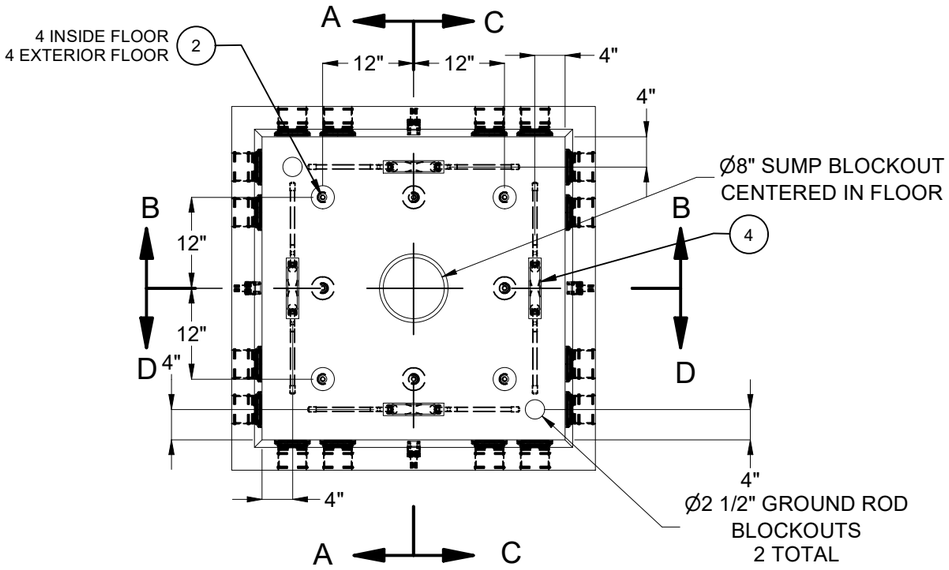

PLAN VIEW

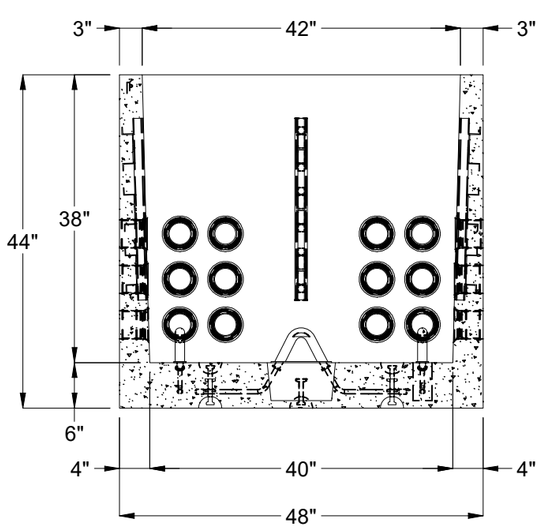

SECTION A-A

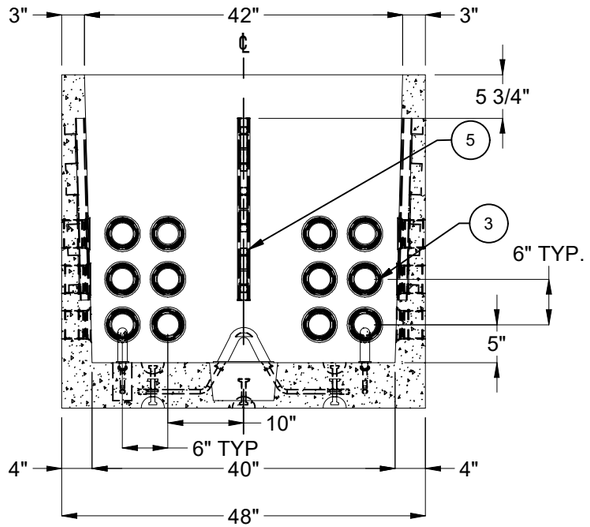

SECTION B-B

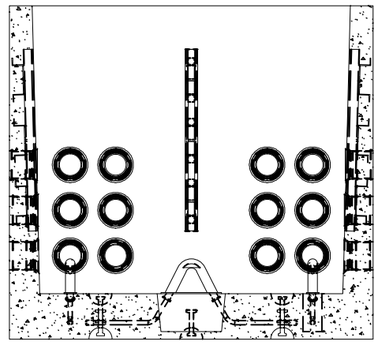

SECTION C-C

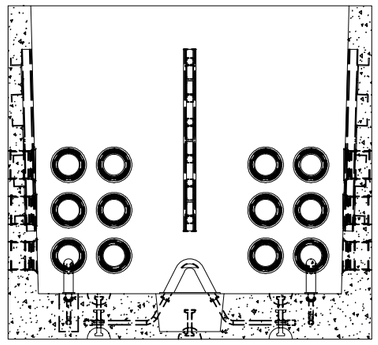

SECTION D- D

BURY DEPTH:	0.7' - 2.8' to Top		
WATER LEVEL:	Below Structure	APPROX. WEIGHT:	3085.88 Lbs
DESIGN SPEC:	ASTM C857,ACI 318	LOADING SPEC:	A-16 (AASHTO HS20-44)
REINFORCEMENT TYPE:	Rebar	LIFTING TYPE:	None

JENSEN PRECAST EST. 1968

WWW.JENSENPRECAST.COM

©2023 Jensen Precast- All rights reserved.
All materials appearing as Jensen Precast documents and the like are proprietary work product and are protected under U.S. copyright and other laws.
Unless in conjunction with business conducted with Jensen Precast, any use of Jensen Precast work product without express, written consent is prohibited, and recipient is prohibited from distributing any and all work product to non-approved third parties under penalty of civil action.

DESCRIPTION: Vault 4242x38 Rect. Bottom Section Terminators Sump

CASTING DRAWING

PART NUMBER:	200059147	DRAWN BY:	MLR
CREATED:	9/7/2016	MODIFIED:	3/3/2023

REV: A-2

SHEET: 2 OF 2

200059147.idw