| NOTES |
| --- |
| ■ FOR COMPLETE DESIGN AND PRODUCT INFORMATION CONTACT JENSEN PRECAST. |

## BILL OF MATERIALS

| ITEM | QTY | PART NUMBER | DESCRIPTION |
| --- | --- | --- | --- |
| 1 | 3.914 ft^3 | 100011425 | CONCRETE MIX GENERIC 5000 PSI |
| 2 | 1 | 300128960 | REINFORCING MAT 300128960 |

200058588.idw

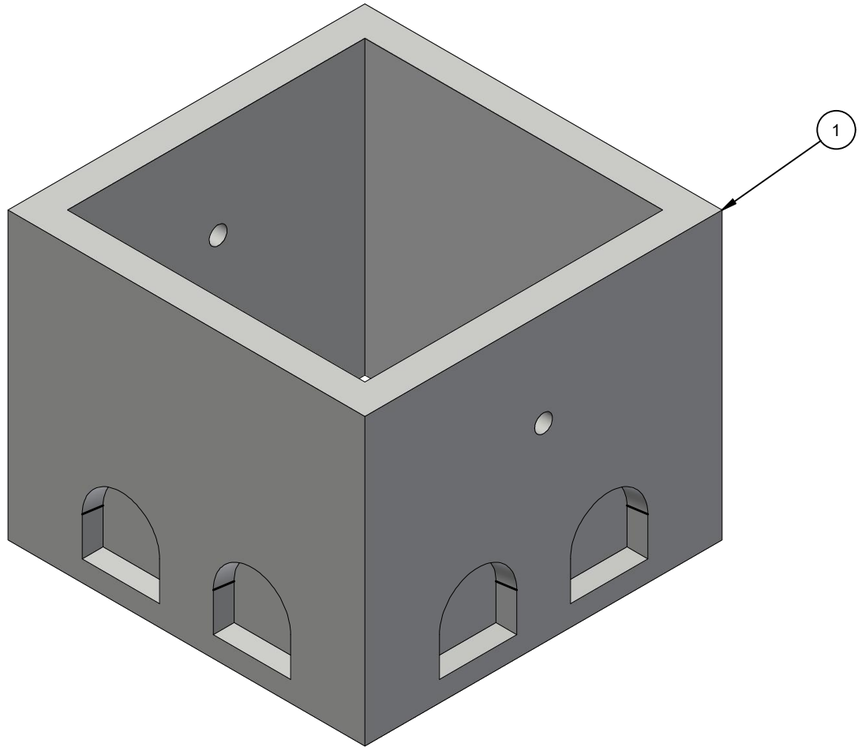


ISO LAYOUT

| LIFTING NOTES |
| --- |
| ■ THIS CONCRETE PRODUCT IS DESIGNED TO BE LIFTED AT 2500 PSI WITH 2 LIFT CONNECTIONS EQUALLY LOADED TO 2 LIFTING POINTS AT A MINIMUM 90° SLING ANGLE, MEASURED FROM HORIZONTAL. |

| | | | |
| --- | --- | --- | --- |
| BURY DEPTH: | 0.0' - 2.5' to Top | | |
| WATER LEVEL: | 5.0' | APPROX. WEIGHT: | 588.26 Lbs |
| DESIGN SPEC: | ASTM C857,ACI 318 | LOADING SPEC: | A-16 (AASHTO HS20-44) |
| REINFORCEMENT TYPE: | Rebar | LIFTING TYPE: | None |

JENSEN PRECAST EST. 1968

WWW.JENSENPRECAST.COM

©2025 Jensen Precast- All rights reserved.
All materials appearing as Jensen Precast documents and the like are proprietary work product and are protected under U.S. copyright and other laws.
Unless in conjunction with business conducted with Jensen Precast, any use of Jensen Precast work product without express, written consent is prohibited, and recipient is prohibited from distributing any and all work product to non-approved third parties under penalty of civil action.

| REVISION HISTORY | | | |
| --- | --- | --- | --- |
| REV | DESCRIPTION | DATE | BY |
| A | DRAWING CREATED | 10/18/2021 | T.Larson |

| | | | |
| --- | --- | --- | --- |
| DESCRIPTION: Vault 2424x24 Rect. Bottom Section Knockout Open Bottom PNW Utilities<br>CASTING LAYOUT | | | REV: A-1 |
| PART NUMBER: | 200058588 | DRAWN BY: T.Larson | SHEET: 1 OF 2 |
| CREATED: | 11/10/2021 | MODIFIED: 2/14/2025 | |

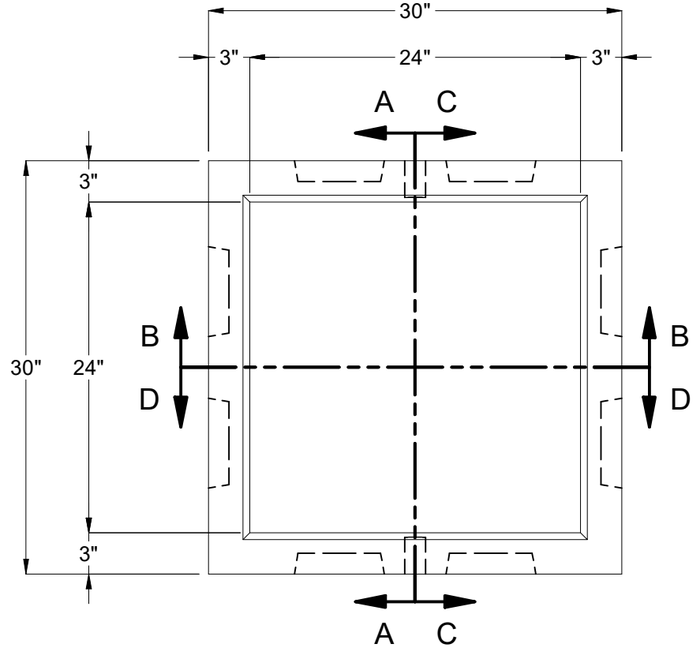


PLAN VIEW

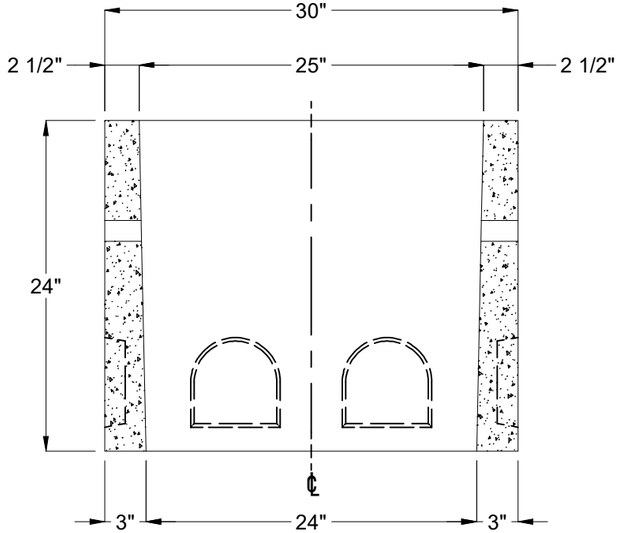


SECTION A-A

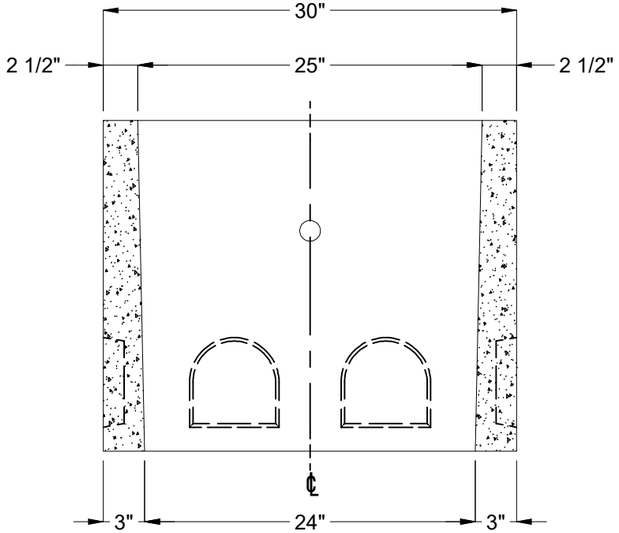


SECTION B-B

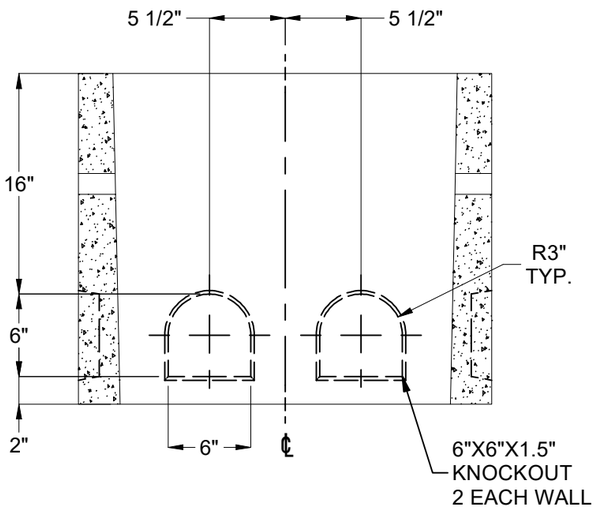


SECTION C-C

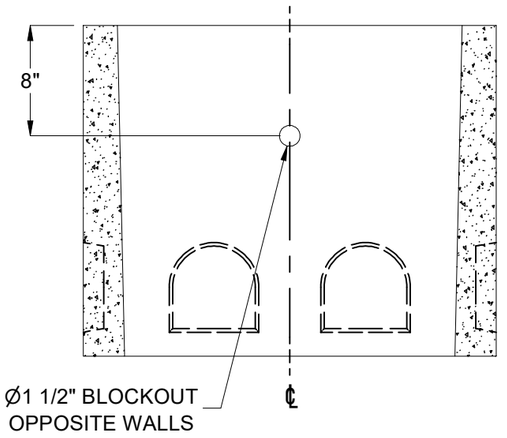


SECTION D-D

| | | | |
|---|---|---|---|
| BURY DEPTH: | 0.0' - 2.5' to Top | | |
| WATER LEVEL: | 5.0' | APPROX. WEIGHT: | 588.26 Lbs |
| DESIGN SPEC: | ASTM C857,ACI 318 | LOADING SPEC: | A-16 (AASHTO HS20-44) |
| REINFORCEMENT TYPE: | Rebar | LIFTING TYPE: | None |

JENSEN PRECAST EST. 1968

WWW.JENSENPRECAST.COM

©2025 Jensen Precast- All rights reserved.
All materials appearing as Jensen Precast documents and the like are proprietary work product and are protected under U.S. copyright and other laws.
Unless in conjunction with business conducted with Jensen Precast, any use of Jensen Precast work product without express, written consent is prohibited, and recipient is prohibited from distributing any and all work product to non-approved third parties under penalty of civil action.

DESCRIPTION:
Vault 2424x24 Rect. Bottom Section Knockout Open Bottom PNW Utilities
CASTING DRAWING

| | | | |
|---|---|---|---|
| PART NUMBER: | 200058588 | DRAWN BY: | T.Larson |
| CREATED: | 11/10/2021 | MODIFIED: | 2/14/2025 |

REV: A-1

SHEET: 2 OF 2

200058588.idw