NOTES
■ STRUCTURAL DESIGN IS BASED ON 300 PSF EQUIPMENT LOADING AND 80 PSF LATERAL PRESSURE FROM HS20 TRAFFIC.
■ DESIGNED TO MEET SPECIFICATIONS OF PUGENT SOUND ENERGY (PSE) 7662010. NOT YET APPROVED BY AGENCY.
■ FOR COMPLETE DESIGN AND PRODUCT INFORMATION CONTACT JENSEN PRECAST.

BILL OF MATERIALS

ITEM	QTY	PART NUMBER	DESCRIPTION
1	13.642 ft^3	100011425	CONCRETE MIX GENERIC 5000 PSI
2	8.000 in	100031103	STRUT C-CHANNEL CONCRETE INSERT 1-5/8 X 7/8 12GA W/ANCHORS GALV
3	1	100040738	GROUND INSERTS BOTTLE ROCKET BRONZE 1/2X36 STEEL ROD 12G69
4	1	300150343	REINFORCING MAT 300150343

200058481.idw

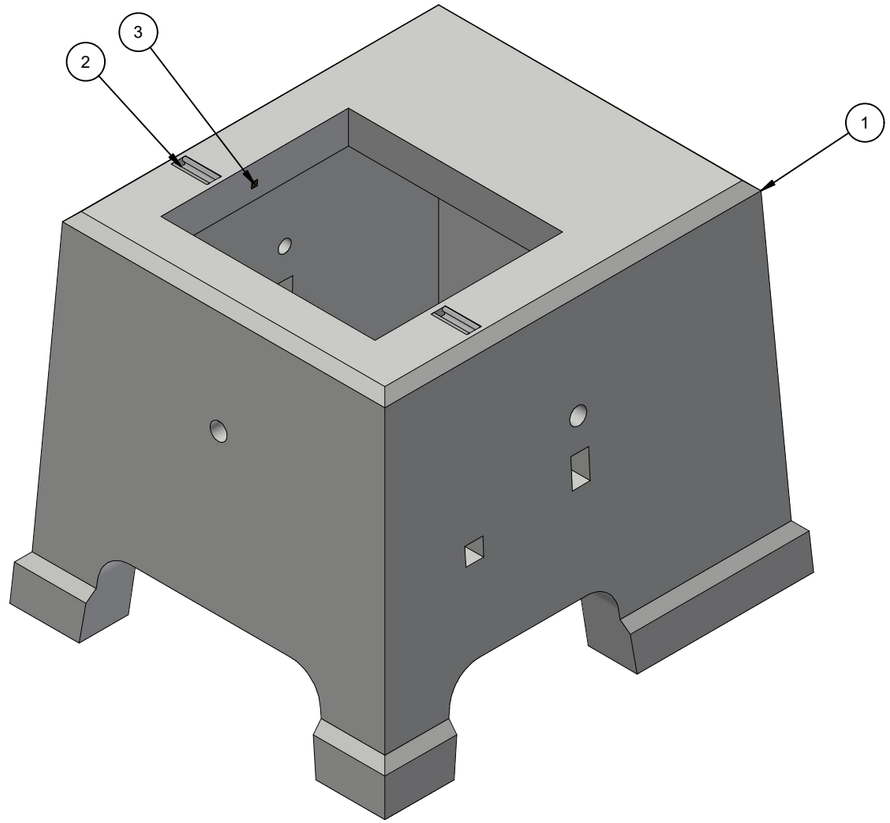

ISO LAYOUT

LIFTING NOTES
■ THIS CONCRETE PRODUCT IS DESIGNED TO BE LIFTED AT 2500 PSI WITH 4 LIFT CONNECTIONS EQUALLY LOADED TO 2 LIFTING POINTS AT A MINIMUM 60° SLING ANGLE, MEASURED FROM HORIZONTAL.

BURY DEPTH:	0.0' - 1.0' to Top		
WATER LEVEL:	5.0'	APPROX. WEIGHT:	2051.6 Lbs
DESIGN SPEC:	ASTM C857,ACI 318	LOADING SPEC:	300 psf Equipment
REINFORCEMENT TYPE:	Rebar	LIFTING TYPE:	Lift Hole

JENSEN PRECAST EST. 1968

WWW.JENSENPRECAST.COM

©2022 Jensen Precast- All rights reserved.
All materials appearing as Jensen Precast documents and the like are proprietary work product and are protected under U.S. copyright and other laws.
Unless in conjunction with business conducted with Jensen Precast, any use of Jensen Precast work product without express, written consent is prohibited, and recipient is prohibited from distributing any and all work product to non-approved third parties under penalty of civil action.

CHANGE HISTORY			
NO.	DESCRIPTION	DATE	BY
1	DRAWING CREATED	3/30/2021	MRV

DESCRIPTION: Pad Mount Vault 3642x34 2124"E

CASTING LAYOUT

REV: A-10

PART NUMBER:	200058481	DRAWN BY:	E. Fine
CREATED:	3/30/2021	MODIFIED:	9/6/2022

SHEET: 1 OF 2

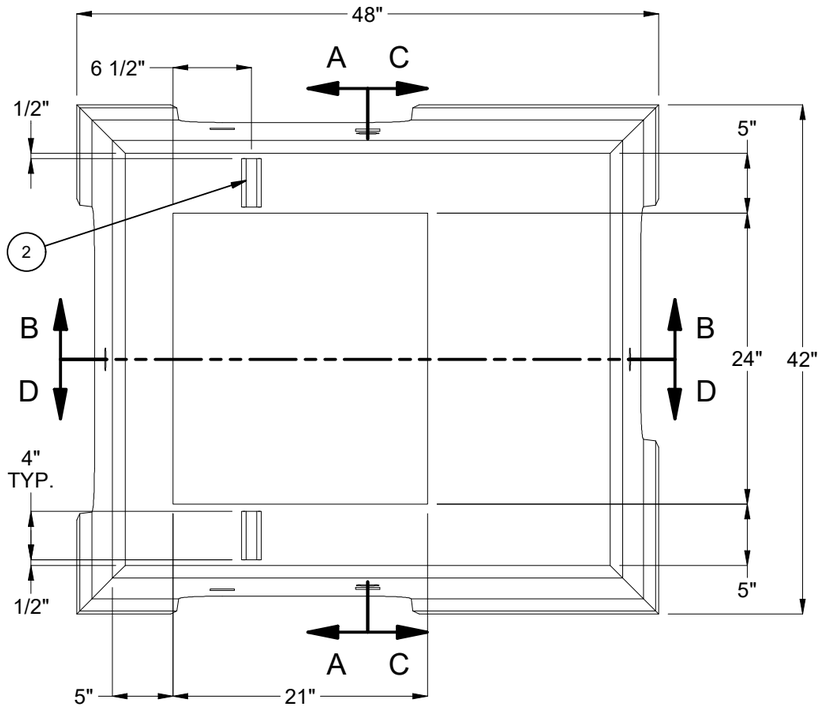

PLAN VIEW

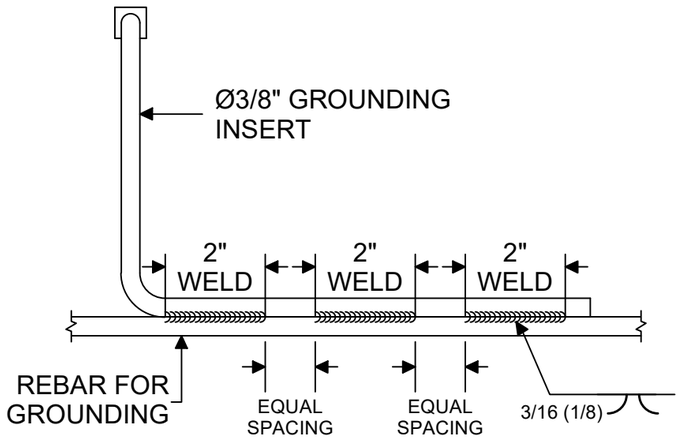

DETAIL 1

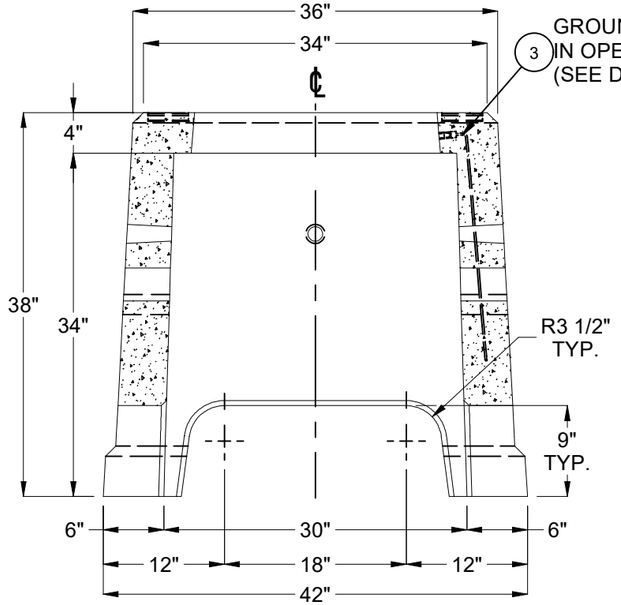

SECTION A-A

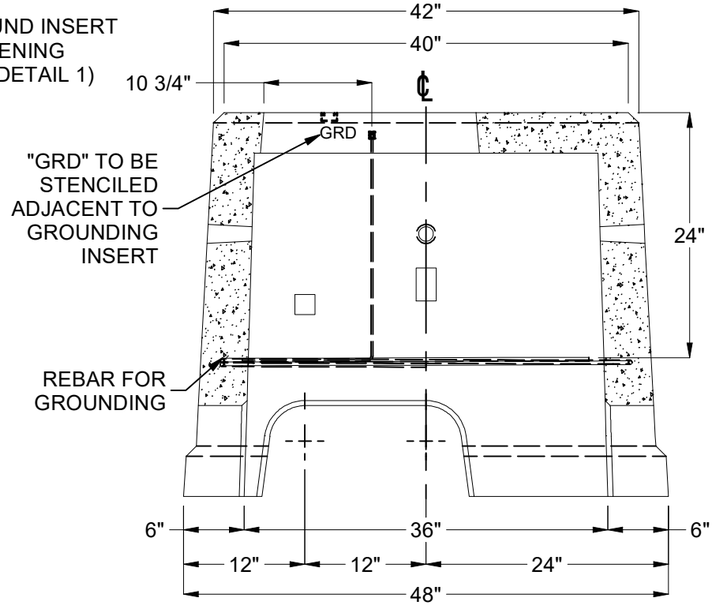

SECTION B-B

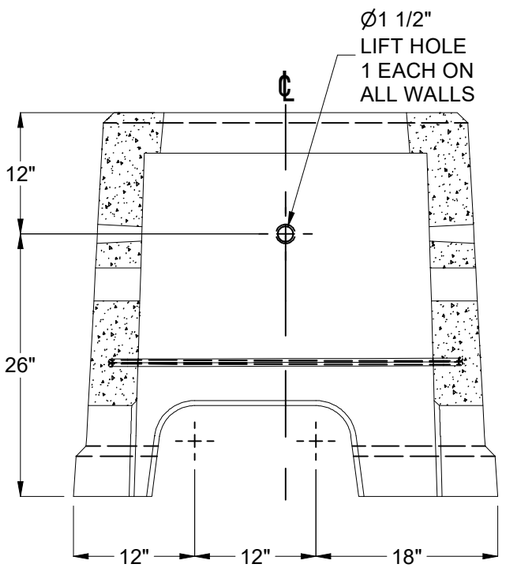

SECTION C-C

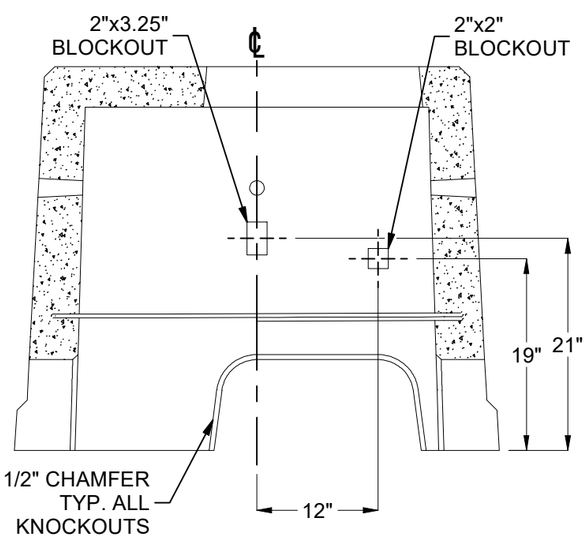

SECTION D-D

BURY DEPTH:	0.0' - 1.0' to Top		
WATER LEVEL:	5.0'	APPROX. WEIGHT:	2051.6 Lbs
DESIGN SPEC:	ASTM C857,ACI 318	LOADING SPEC:	300 psf Equipment
REINFORCEMENT TYPE:	Rebar	LIFTING TYPE:	Lift Hole

JENSEN PRECAST EST. 1968

WWW.JENSENPRECAST.COM

©2022 Jensen Precast- All rights reserved.
All materials appearing as Jensen Precast documents and the like are proprietary work product and are protected under U.S. copyright and other laws.
Unless in conjunction with business conducted with Jensen Precast, any use of Jensen Precast work product without express, written consent is prohibited, and recipient is prohibited from distributing any and all work product to non-approved third parties under penalty of civil action.

DESCRIPTION:	Pad Mount Vault 3642x34 2124"E CASTING DRAWING		REV: A-10
PART NUMBER:	200058481	DRAWN BY:	E. Fine
CREATED:	3/30/2021	MODIFIED:	9/6/2022
			SHEET: 2 OF 2

200058481.idw