NOTES
■ FOR COMPLETE DESIGN AND PRODUCT INFORMATION CONTACT JENSEN PRECAST.

BILL OF MATERIALS

ITEM	QTY	PART NUMBER	DESCRIPTION
1	53.789 ft^3	100011427	CONCRETE MIX GENERIC 6000 PSI
2	1	200058152	RCP CAGE P48C Class 5 Bell-Spigot 96L-INNER
3	1	200058151	RCP CAGE P48C Class 5 Bell-Spigot 96L-OUTER

ALTERNATE REINFORCING OPTION	
PART NUMBER	DESCRIPTION
200058133	WWR REINFORCING CAGE 200058133

200058132.idw

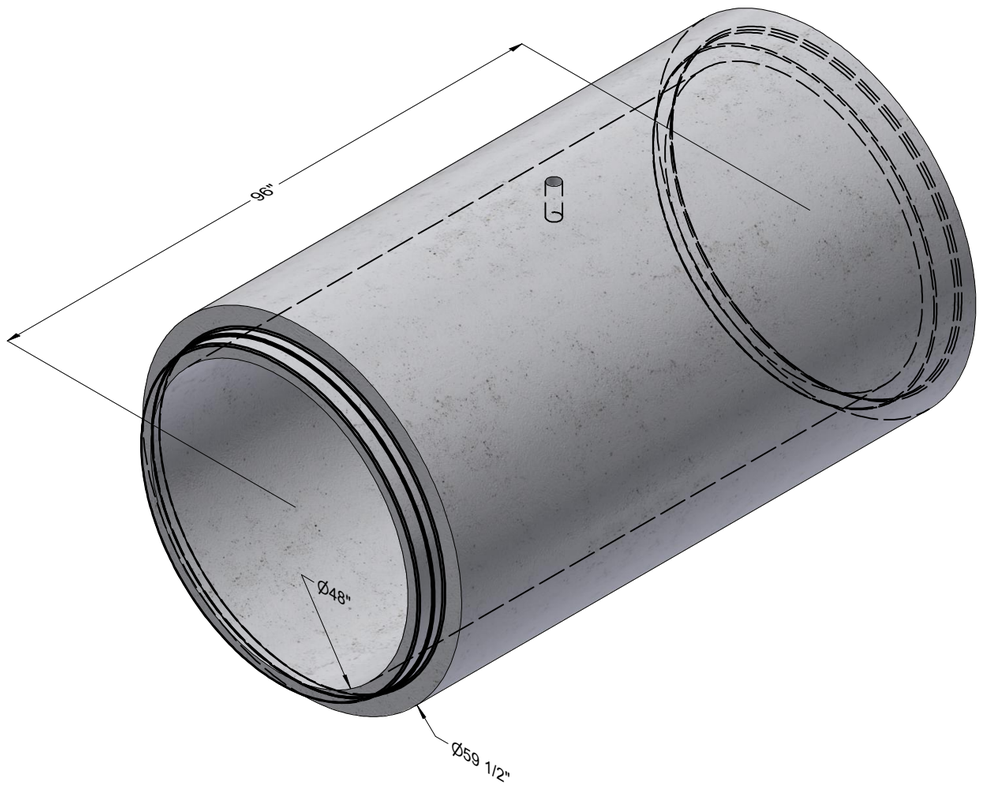

ISO REF

LIFTING NOTES
■ THIS CONCRETE PRODUCT IS DESIGNED TO BE LIFTED AT 4000PSI WITH 1 LIFT CONNECTIONS EQUALLY LOADED TO 1 LIFTING POINTS AT A MINIMUM 90° SLING ANGLE, MEASURED FROM HORIZONTAL.

BURY DEPTH:	to		
WATER LEVEL:		APPROX. WEIGHT:	8083.63 Lbs
DESIGN SPEC:	ASTM C76/AASHTO M170	LOADING SPEC:	Class 5
REINFORCEMENT TYPE:	Plain Wire	LIFTING TYPE:	Teacup

JENSEN PRECAST EST. 1968

WWW.JENSENPRECAST.COM

©2023 Jensen Precast- All rights reserved.
All materials appearing as Jensen Precast documents and the like are proprietary work product and are protected under U.S. copyright and other laws.
Unless in conjunction with business conducted with Jensen Precast, any use of Jensen Precast work product without express, written consent is prohibited, and recipient is prohibited from distributing any and all work product to non-approved third parties under penalty of civil action.

REVISION HISTORY

REV	DESCRIPTION	DATE	APPROVED
B	REVISED JOINTS TO MATCH HAWKEYE JOINT DETAIL	12/6/2023	

DESCRIPTION:	RCP P48C Class 5 Bell - Spigot 96L CASTING LAYOUT		REV: B-1
PART NUMBER:	200058132	DRAWN BY:	R. Ramos
CREATED:	12/23/2019	MODIFIED:	12/6/2023
			SHEET: 1 OF 2

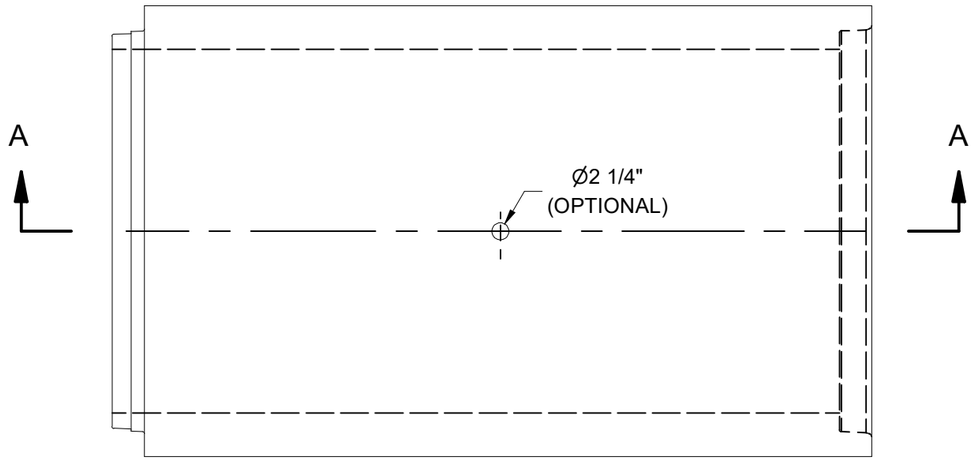

PLAN VIEW

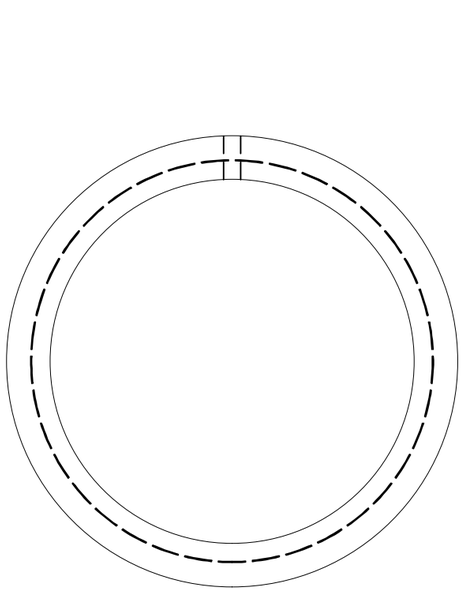

SPIGOT END

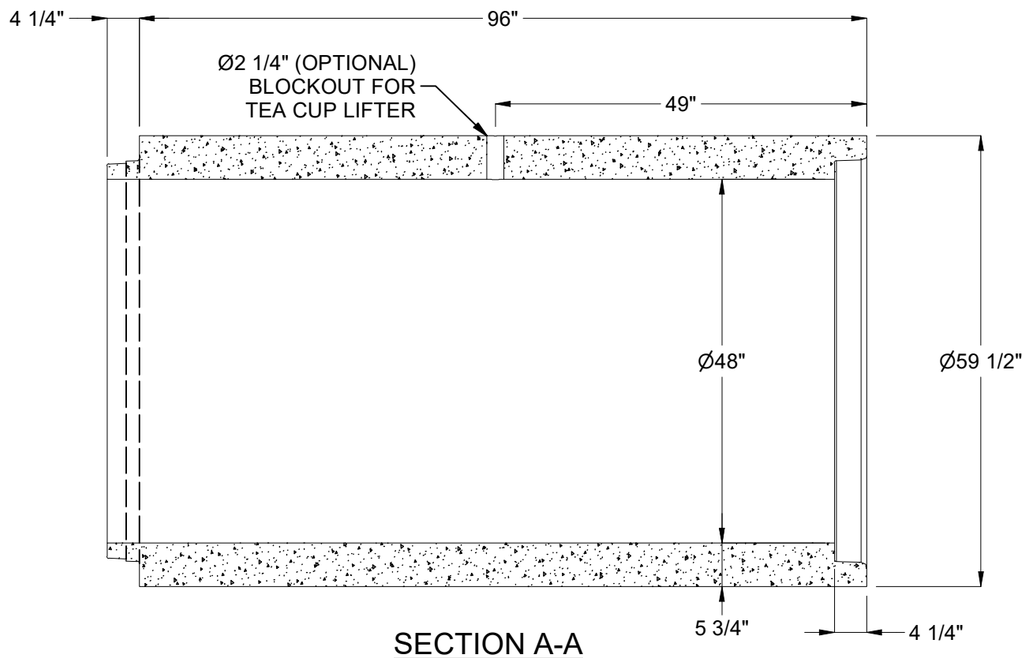

SECTION A-A

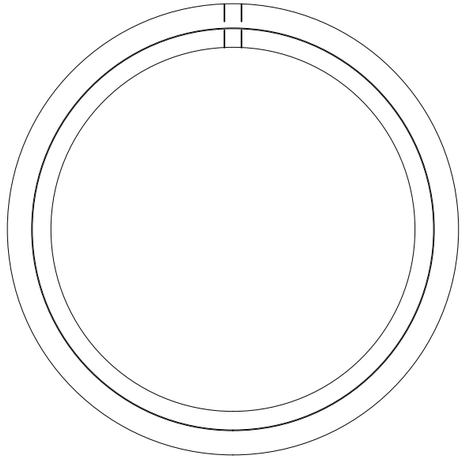

BELL END

BURY DEPTH:	to		
WATER LEVEL:		APPROX. WEIGHT:	8083.63 Lbs
DESIGN SPEC:	ASTM C76/AASHTO M170	LOADING SPEC:	Class 5
REINFORCEMENT TYPE:	Plain Wire	LIFTING TYPE:	Teacup

JENSEN PRECAST EST. 1968

WWW.JENSENPRECAST.COM

©2023 Jensen Precast- All rights reserved.
All materials appearing as Jensen Precast documents and the like are proprietary work product and are protected under U.S. copyright and other laws.
Unless in conjunction with business conducted with Jensen Precast, any use of Jensen Precast work product without express, written consent is prohibited, and recipient is prohibited from distributing any and all work product to non-approved third parties under penalty of civil action.

DESCRIPTION:	RCP P48C Class 5 Bell - Spigot 96L CASTING DRAWING		REV: B-1
PART NUMBER:	200058132	DRAWN BY:	R. Ramos
CREATED:	12/23/2019	MODIFIED:	12/6/2023
			SHEET: 2 OF 2

200058132.idw