NOTES
■ FOR COMPLETE DESIGN AND PRODUCT INFORMATION CONTACT JENSEN PRECAST.

BILL OF MATERIALS

ITEM	QTY	PART NUMBER	DESCRIPTION
1	43.132 ft^3	100002728	CONCRETE MIX GENERIC 4000 PSI
2	1	200057979	RCP CAGE P42C Class 3 Bell-Spigot 96L-INNER
3	1	200057980	RCP CAGE P42C Class 3 Bell-Spigot 96L-OUTER

ALTERNATE REINFORCING OPTION	
PART NUMBER	DESCRIPTION
200057995	WWR REINFORCING CAGE 200057995

200057996.idw

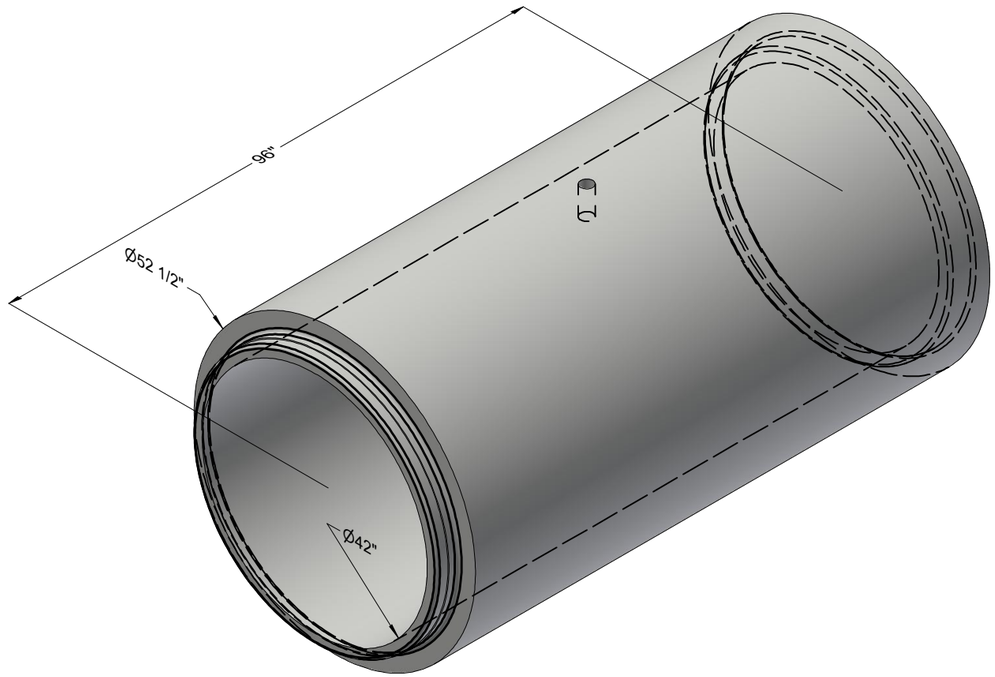

ISO REF

LIFTING NOTES
■ THIS CONCRETE PRODUCT IS DESIGNED TO BE LIFTED AT 4000PSI WITH 1 LIFT CONNECTIONS EQUALLY LOADED TO 1 LIFTING POINTS AT A MINIMUM 90° SLING ANGLE, MEASURED FROM HORIZONTAL.

BURY DEPTH:	to		
WATER LEVEL:		APPROX. WEIGHT:	6481.99 Lbs
DESIGN SPEC:	ASTM C76/AASHTO M170	LOADING SPEC:	Class 3
REINFORCEMENT TYPE:	Plain Wire	LIFTING TYPE:	Teacup

JENSEN PRECAST EST. 1968

WWW.JENSENPRECAST.COM

©2021 Jensen Precast- All rights reserved.
All materials appearing as Jensen Precast documents and the like are proprietary work product and are protected under U.S. copyright and other laws.
Unless in conjunction with business conducted with Jensen Precast, any use of Jensen Precast work product without express, written consent is prohibited, and recipient is prohibited from distributing any and all work product to non-approved third parties under penalty of civil action.

CHANGE HISTORY

NO.	DESCRIPTION	DATE	BY
1	2111-51918	11-11-21	DCH

DESCRIPTION: RCP P42C Class 3 Bell - Spigot 96L

CASTING LAYOUT

PART NUMBER:	200057996	DRAWN BY:	MLR
CREATED:	11/11/2021	MODIFIED:	11/12/2021

REV: A-2

SHEET: 1 OF 2

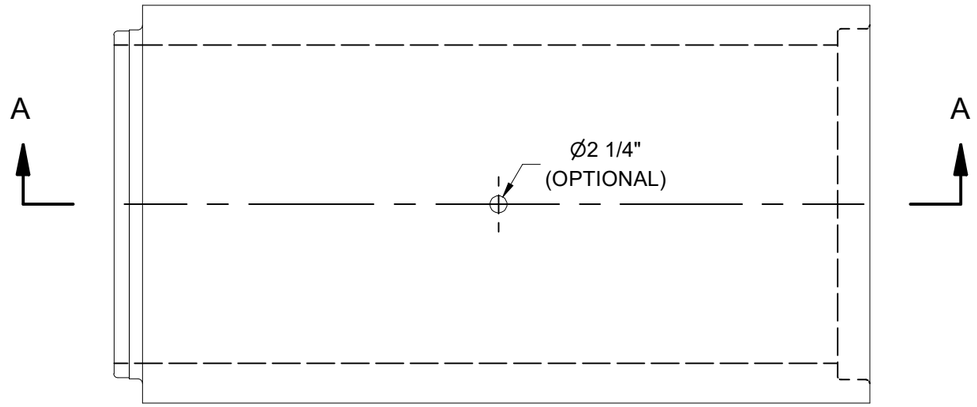

PLAN VIEW

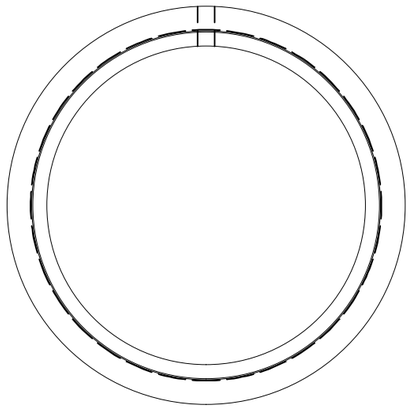

SPIGOT END

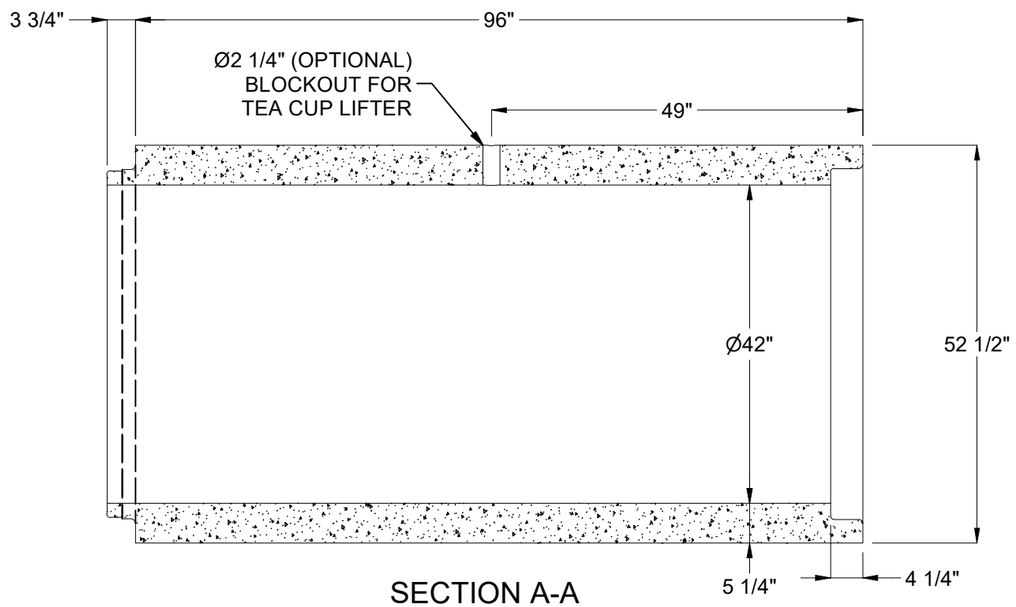

SECTION A-A

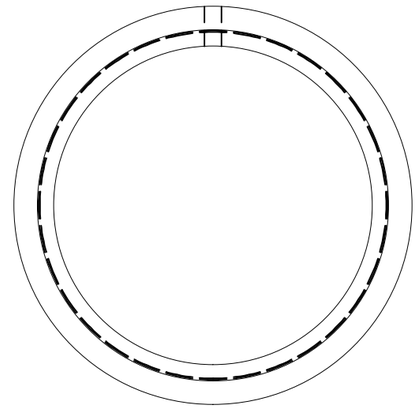

BELL END

BURY DEPTH:	to		
WATER LEVEL:		APPROX. WEIGHT:	6481.99 Lbs
DESIGN SPEC:	ASTM C76/AASHTO M170	LOADING SPEC:	Class 3
REINFORCEMENT TYPE:	Plain Wire	LIFTING TYPE:	Teacup

JENSEN PRECAST EST. 1968

WWW.JENSENPRECAST.COM

©2021 Jensen Precast- All rights reserved.
All materials appearing as Jensen Precast documents and the like are proprietary work product and are protected under U.S. copyright and other laws.
Unless in conjunction with business conducted with Jensen Precast, any use of Jensen Precast work product without express, written consent is prohibited, and recipient is prohibited from distributing any and all work product to non-approved third parties under penalty of civil action.

DESCRIPTION:	RCP P42C Class 3 Bell - Spigot 96L CASTING DRAWING		REV: A-2
PART NUMBER:	200057996	DRAWN BY:	MLR
CREATED:	11/11/2021	MODIFIED:	11/12/2021
			SHEET: 2 OF 2

200057996.idw