NOTES
■ FOR COMPLETE DESIGN AND PRODUCT INFORMATION CONTACT JENSEN PRECAST.

BILL OF MATERIALS

ITEM	QTY	PART NUMBER	DESCRIPTION
1	10.896 ft^3	100011425	CONCRETE MIX GENERIC 5000 PSI
2	6	100003343	INS THRD FRL THNSLB STRUT FX-16 3/4IN PLAIN
3	96.0000 in	100022114	STRUT C-CHANNEL 13/16 X 1-5/8 16GA SOLID GALV SHALLOW W-400/P4000
4	1	300128877	REINFORCING MAT 300128877

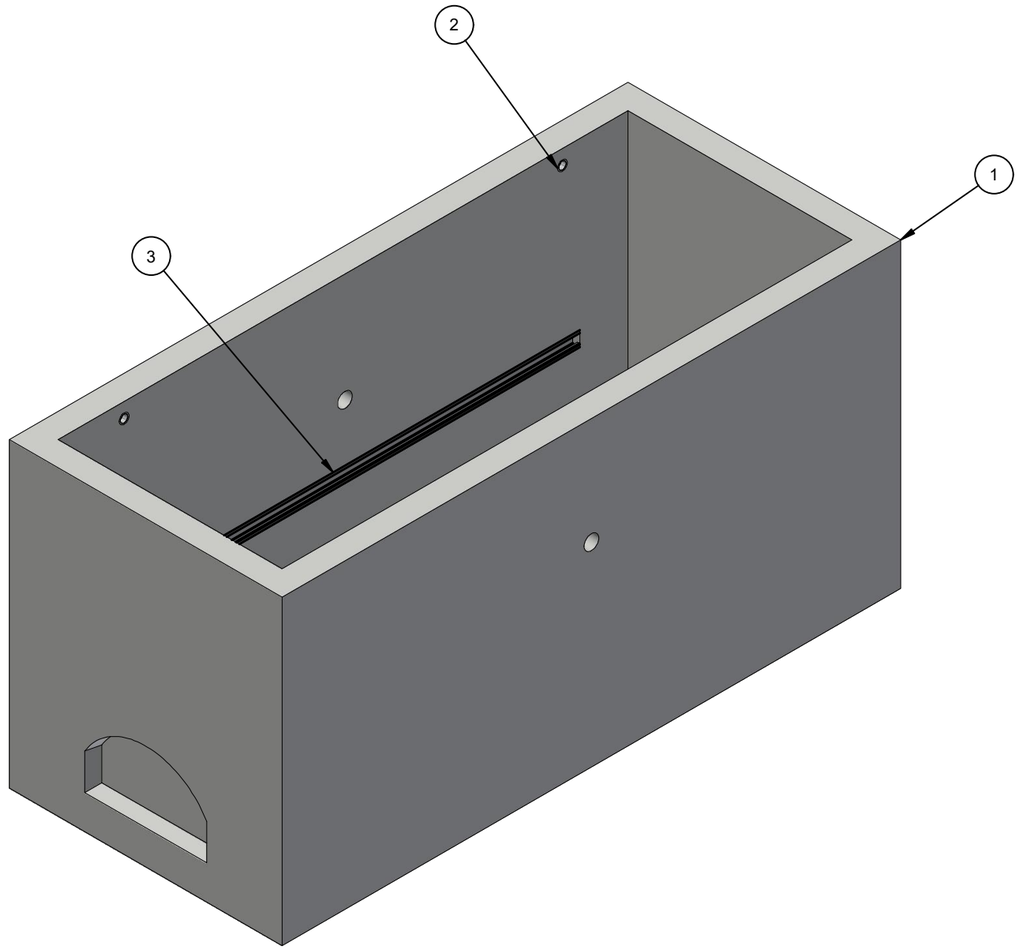

ISO LAYOUT

LIFTING NOTES
■ THIS CONCRETE PRODUCT IS DESIGNED TO BE LIFTED AT 2500 PSI WITH 2 LIFT CONNECTIONS EQUALLY LOADED TO 2 LIFTING POINTS AT A MINIMUM 90° SLING ANGLE, MEASURED FROM HORIZONTAL.

BURY DEPTH:	0.0' - 2.5' to Top		
WATER LEVEL:	5.0'	APPROX. WEIGHT:	1645.76 Lbs
DESIGN SPEC:	ASTM C857,ACI 318	LOADING SPEC:	A-16 (AASHTO HS20-44)
REINFORCEMENT TYPE:	Rebar	LIFTING TYPE:	None

JENSEN PRECAST EST. 1968

WWW.JENSENPRECAST.COM

©2025 Jensen Precast- All rights reserved.
All materials appearing as Jensen Precast documents and the like are proprietary work product and are protected under U.S. copyright and other laws.
Unless in conjunction with business conducted with Jensen Precast, any use of Jensen Precast work product without express, written consent is prohibited, and recipient is prohibited from distributing any and all work product to non-approved third parties under penalty of civil action.

REVISION HISTORY

REV	DESCRIPTION	DATE	BY
A	DRAWING CREATED	10/18/2021	T.Larson

DESCRIPTION: Vault 2258x27.5 Rect. Bottom Section Knockout PNW Utilities

CASTING LAYOUT

PART NUMBER:	200057957	DRAWN BY:	T.Larson
CREATED:	11/10/2021	MODIFIED:	2/14/2025

REV: A-2

SHEET: 1 OF 2

200057957.idw

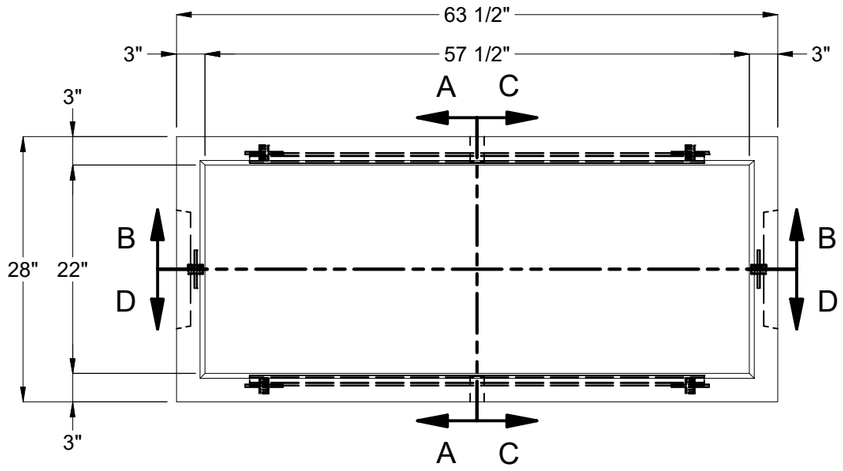

PLAN VIEW

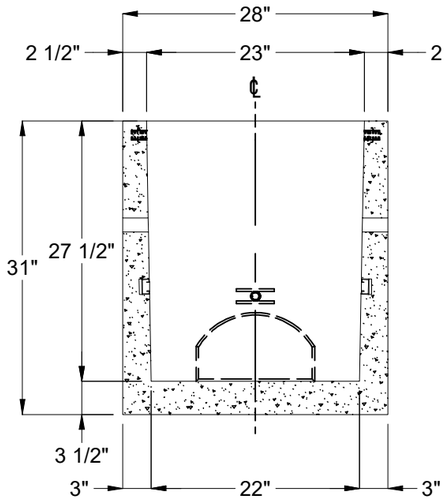

SECTION A-A

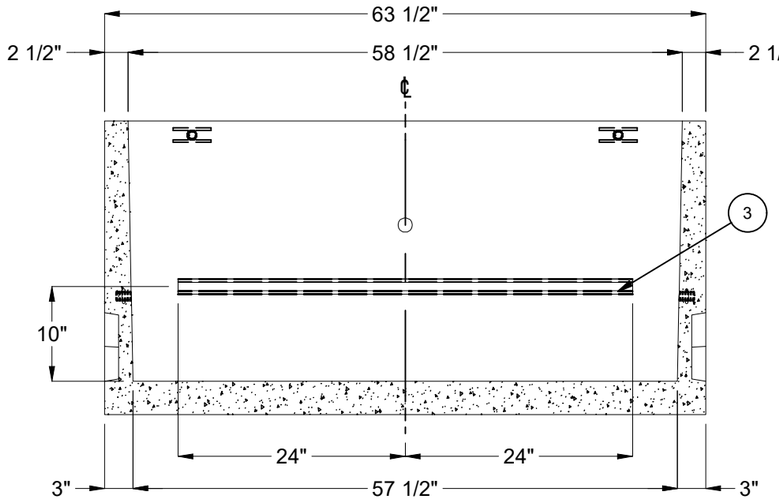

SECTION B-B

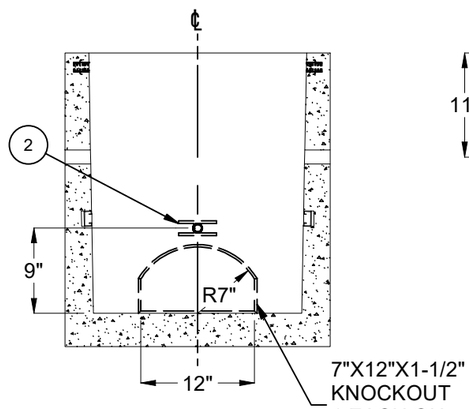

7"X12"X1-1/2"
KNOCKOUT
1 EACH ON
END WALLS

SECTION C-C

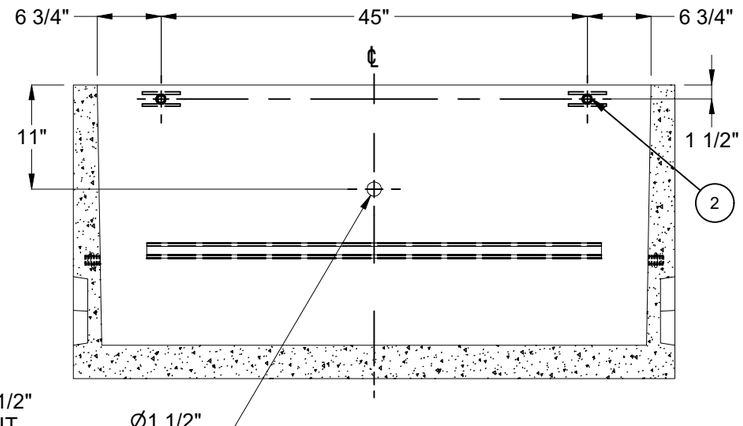

Ø1 1/2"
BLOCKOUT
SIDE WALLS

SECTION D-D

BURY DEPTH:	0.0' - 2.5' to Top		
WATER LEVEL:	5.0'	APPROX. WEIGHT:	1645.76 Lbs
DESIGN SPEC:	ASTM C857,ACI 318	LOADING SPEC:	A-16 (AASHTO HS20-44)
REINFORCEMENT TYPE:	Rebar	LIFTING TYPE:	None

JENSEN PRECAST EST. 1968

WWW.JENSENPRECAST.COM

©2025 Jensen Precast- All rights reserved.
All materials appearing as Jensen Precast documents and the like are proprietary work product and are protected under U.S. copyright and other laws.
Unless in conjunction with business conducted with Jensen Precast, any use of Jensen Precast work product without express, written consent is prohibited, and recipient is prohibited from distributing any and all work product to non-approved third parties under penalty of civil action.

DESCRIPTION:	Vault 2258x27.5 Rect. Bottom Section Knockout PNW Utilities CASTING DRAWING		REV: A-2
PART NUMBER:	200057957	DRAWN BY:	T.Larson
CREATED:	11/10/2021	MODIFIED:	2/14/2025
			SHEET: 2 OF 2

200057957.idw