| DESIGN NOTES |
|---|
| ■ FOR COMPLETE DESIGN AND PRODUCT INFORMATION CONTACT JENSEN PRECAST. |

## BILL OF MATERIALS

| ITEM | QTY | PART NUMBER | DESCRIPTION | WEIGHT |
|---|---|---|---|---|
| 1 | 1 | 200057355 | Vault 5078x44 Rect. Bottom Section Knockout Sump SnoPUD 1001608 | 6706.30 lbmass |
| 2 | 1 | 200057425 | Vault 4878x7 Slab Top 24"x30"E, 36"x36"E SnoPUD | 2113.74 lbmass |

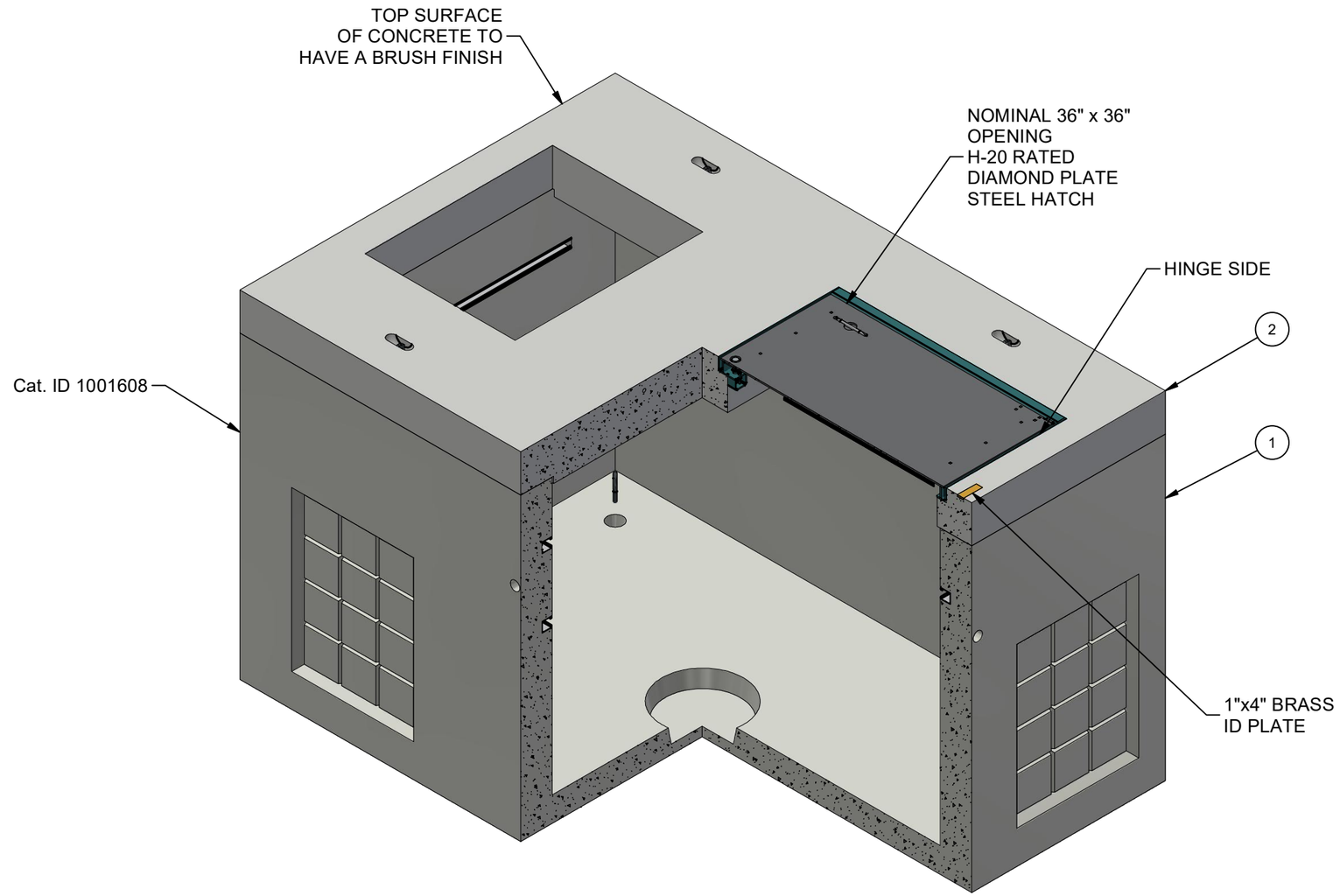


ISO LAYOUT

| CHANGE HISTORY | | | |
|---|---|---|---|
| NO. | DESCRIPTION | DATE | BY |
| 1 | DRAWING CREATED | 2/26/2022 | T.Larson |

| | | | |
|---|---|---|---|
| BURY DEPTH: | 0.0' - 0.0' to Top | | |
| WATER LEVEL: | 5.0' | APPROX. WEIGHT: | 8820.04 Lbs |
| DESIGN SPEC: | ACI 318,ASTM C857 | LOADING SPEC: | A-16 (AASHTO HS20-44) |
| AGENCY: | SnoPUD | AGENCY SPEC: | 1000746 |

JENSEN PRECAST EST. 1968

WWW.JENSENPRECAST.COM

©2023 Jensen Precast- All rights reserved.
All materials appearing as Jensen Precast documents and the like are proprietary work product and are protected under U.S. copyright and other laws.
Unless in conjunction with business conducted with Jensen Precast, any use of Jensen Precast work product without express, written consent is prohibited, and recipient is prohibited from distributing any and all work product to non-approved third parties under penalty of civil action.

DESCRIPTION:
Vault Layout 4878x43 Knockout Ducted,Sump 24"x30"E, 36"x36"E SnoPUD 1000746

LAYOUT REVIEW

| | | | |
|---|---|---|---|
| PART NUMBER: | 200057479 | DRAWN BY: | E.Fine |
| CREATED: | 9/13/2021 | MODIFIED: | 10/17/2023 |

REV: A-13

SHEET: 1 OF 2

200057479.idw

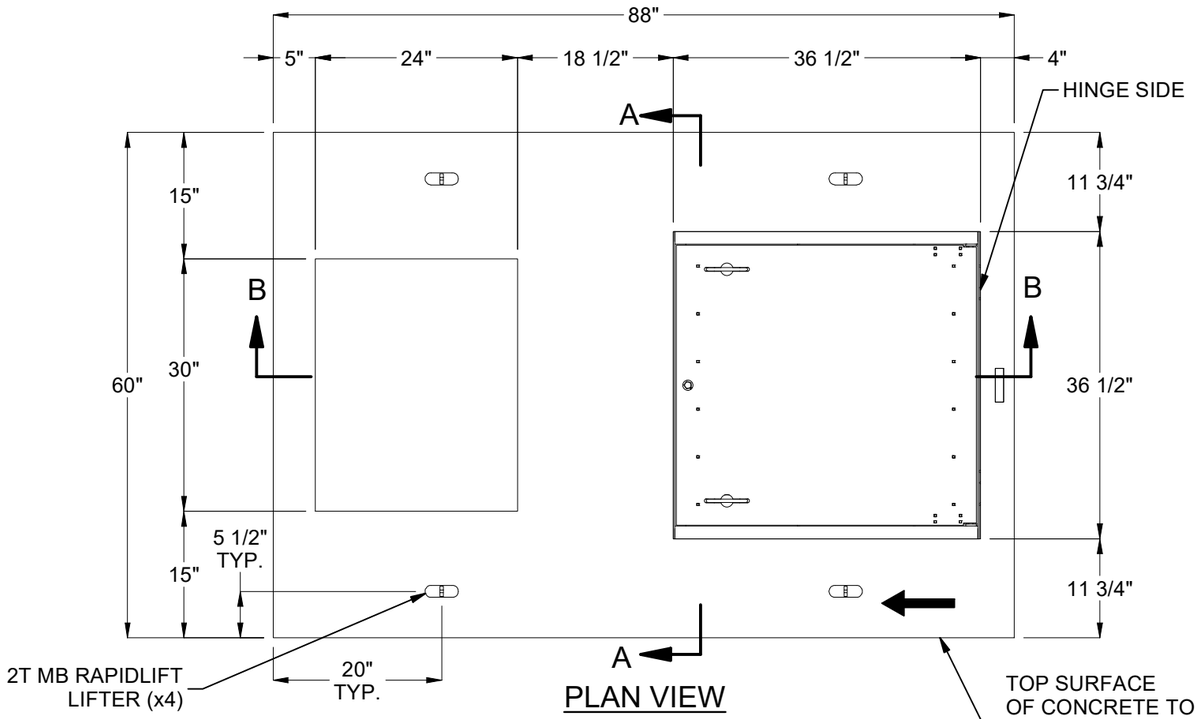


PLAN VIEW

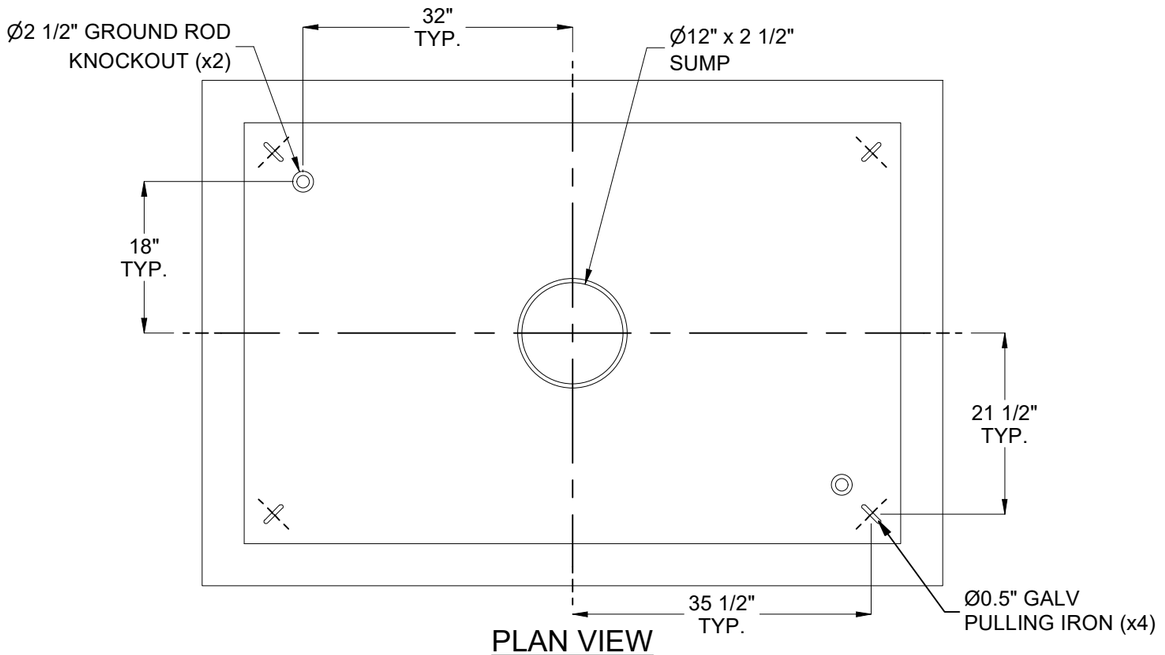


PLAN VIEW
(SHOWING INSIDE FLOOR)

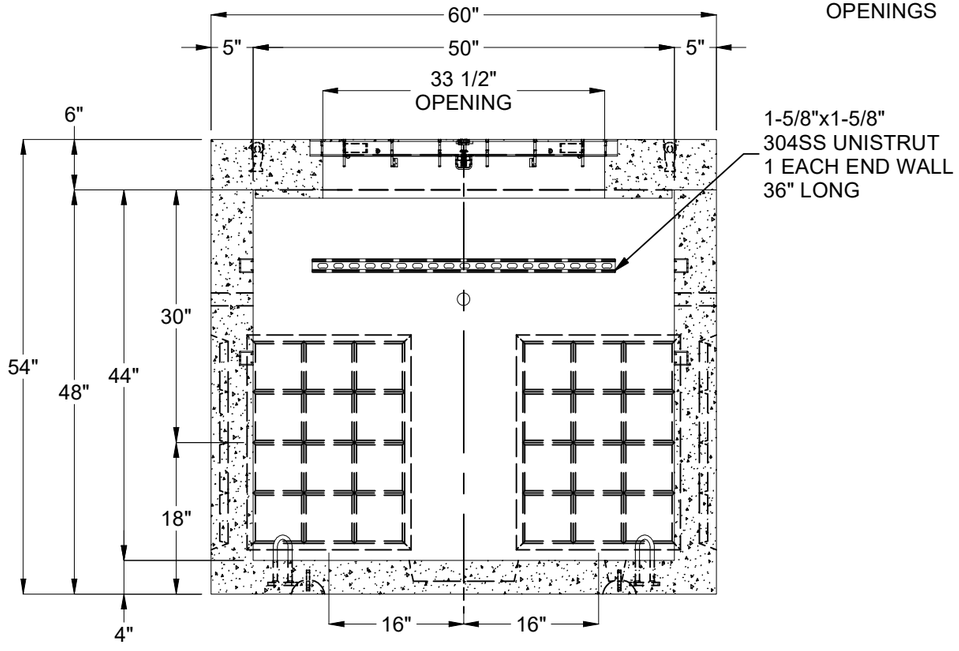


SECTION A-A

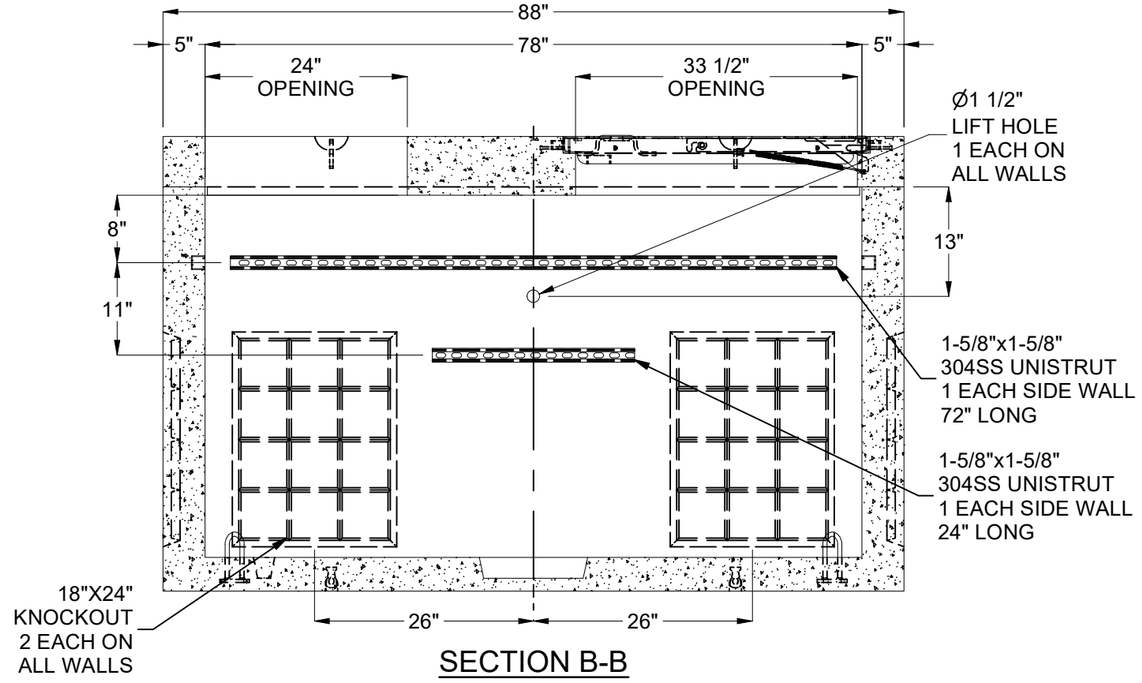


SECTION B-B

| | | | |
|---|---|---|---|
| BURY DEPTH: | 0.0' - 0.0' to Top | | |
| WATER LEVEL: | 5.0' | APPROX. WEIGHT: | 8820.04 Lbs |
| DESIGN SPEC: | ACI 318,ASTM C857 | LOADING SPEC: | A-16 (AASHTO HS20-44) |
| AGENCY: | SnoPUD | AGENCY SPEC: | 1000746 |

JENSEN PRECAST EST. 1968

WWW.JENSENPRECAST.COM

©2023 Jensen Precast- All rights reserved.
All materials appearing as Jensen Precast documents and the like are proprietary work product and are protected under U.S. copyright and other laws.
Unless in conjunction with business conducted with Jensen Precast, any use of Jensen Precast work product without express, written consent is prohibited, and recipient is prohibited from distributing any and all work product to non-approved third parties under penalty of civil action.

| | | | |
|---|---|---|---|
| DESCRIPTION: | Vault Layout 4878x43 Knockout Ducted,Sump 24"x30"E, 36"x36"E SnoPUD 1000746 | | REV: A-13 |
| | LAYOUT DRAWING | | SHEET: 2 OF 2 |
| PART NUMBER: | 200057479 | DRAWN BY: | E.Fine |
| CREATED: | 9/13/2021 | MODIFIED: | 10/17/2023 |

200057479.idw