NOTES
■ FOR COMPLETE DESIGN AND PRODUCT INFORMATION CONTACT JENSEN PRECAST.

BILL OF MATERIALS

ITEM	QTY	PART NUMBER	DESCRIPTION
1	14.605 ft^3	100011429	CONCRETE MIX GENERIC 7000 PSI
2	1	200063368	CAS2-3366-CH4-DP-G-BD-SL-GR-PNW-OH07
3	4	100035848	Insert Ferrule Loop 0.75 x 3.5" 304SS (F42 or Equiv.)
4	1	100040388	PLATE 1x4 BRASS
5	1	300154006	REINFORCING MAT 300154006
6	1	300154007	REINFORCING MAT 300154007

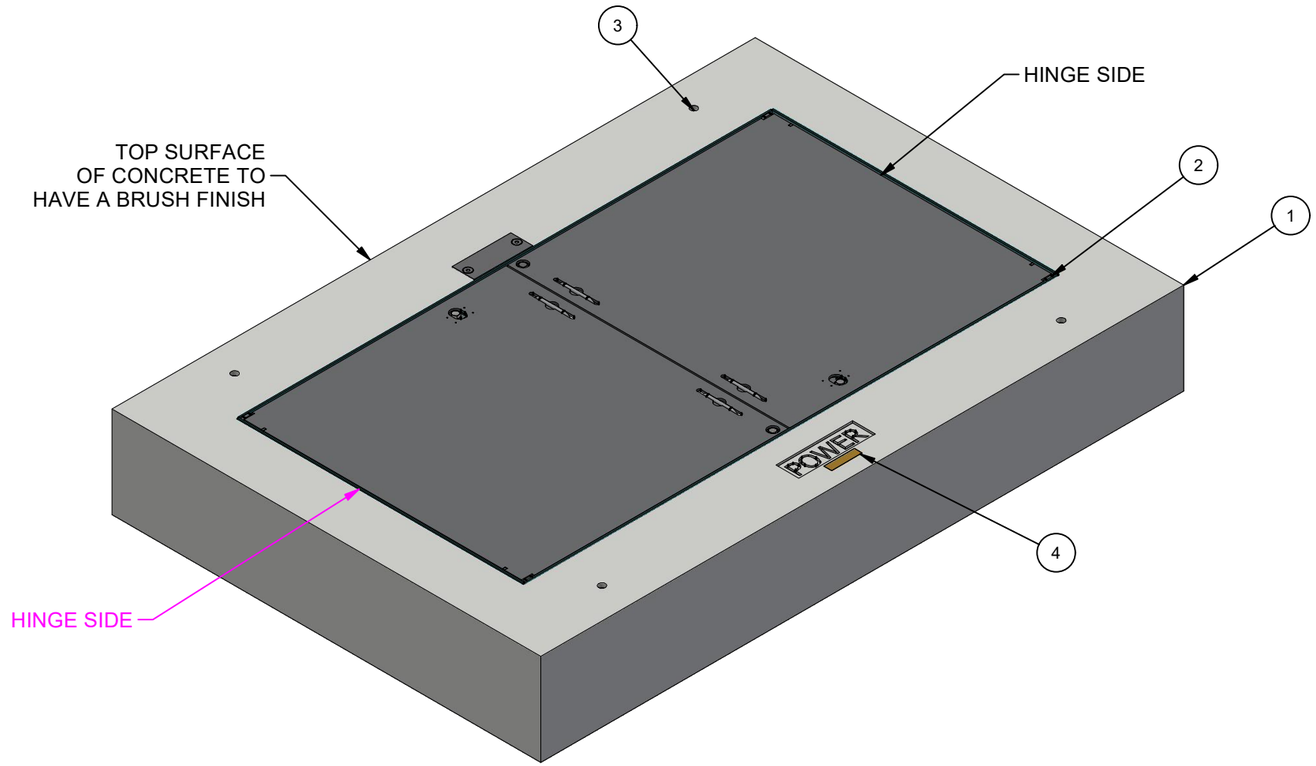

ISO LAYOUT

LIFTING NOTES
■ INSTALLATION: THIS CONCRETE PRODUCT IS DESIGNED TO BE LIFTED AT 6000 PSI WITH 4 LIFT CONNECTIONS EQUALLY LOADED TO 2 LIFTING POINTS AT A MINIMUM 70° SLING ANGLE, MEASURED FROM HORIZONTAL.
■ DEMOLDING: THIS CONCRETE PRODUCT IS DESIGNED TO BE LIFTED AT 2500 PSI WITH 4 LIFT CONNECTIONS EQUALLY LOADED TO 4 LIFTING POINTS AT A MINIMUM 60° SLING ANGLE, MEASURED FROM HORIZONTAL.
*All rigging shall be design by a qualified professional. Loading diagrams show illustrations of possible rigging setups to achieve the required sling angle and load leg equalization. Other valid rigging configurations are possible. A qualified professional must be consulted prior to lifting.

BURY DEPTH:	0.0' - 0.0' to Top		
WATER LEVEL:	5.0'	APPROX. WEIGHT:	2553.74 Lbs
DESIGN SPEC:	ACI 318,ASTM C857	LOADING SPEC:	A-16 (AASHTO HS20-44)
REINFORCEMENT TYPE:	Rebar	LIFTING TYPE:	Insert

RIGGING DIAGRAMS*

INSTALLATION	B	DEMOLDING	C

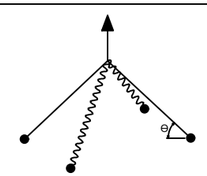

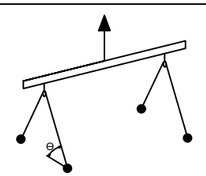

JENSEN PRECAST EST. 1968

WWW.JENSENPRECAST.COM

©2024 Jensen Precast- All rights reserved.
All materials appearing as Jensen Precast documents and the like are proprietary work product and are protected under U.S. copyright and other laws.
Unless in conjunction with business conducted with Jensen Precast, any use of Jensen Precast work product without express, written consent is prohibited, and recipient is prohibited from distributing any and all work product to non-approved third parties under penalty of civil action.

CHANGE HISTORY

NO.	DESCRIPTION	DATE	BY
A	DRAWING CREATED	10/15/2021	T.Larson
B	LIFTERS AND DIMENSIONS UPDATED	12/14/2023	E.Fine

DESCRIPTION: Vault 4878x13 Slab Top 36"x72"C SnoPUD

CASTING LAYOUT

PART NUMBER:	200057411	DRAWN BY:	E.Fine
CREATED:	10/14/2021	MODIFIED:	1/24/2024

REV: B-1

SHEET: 1 OF 2

200057411.idw

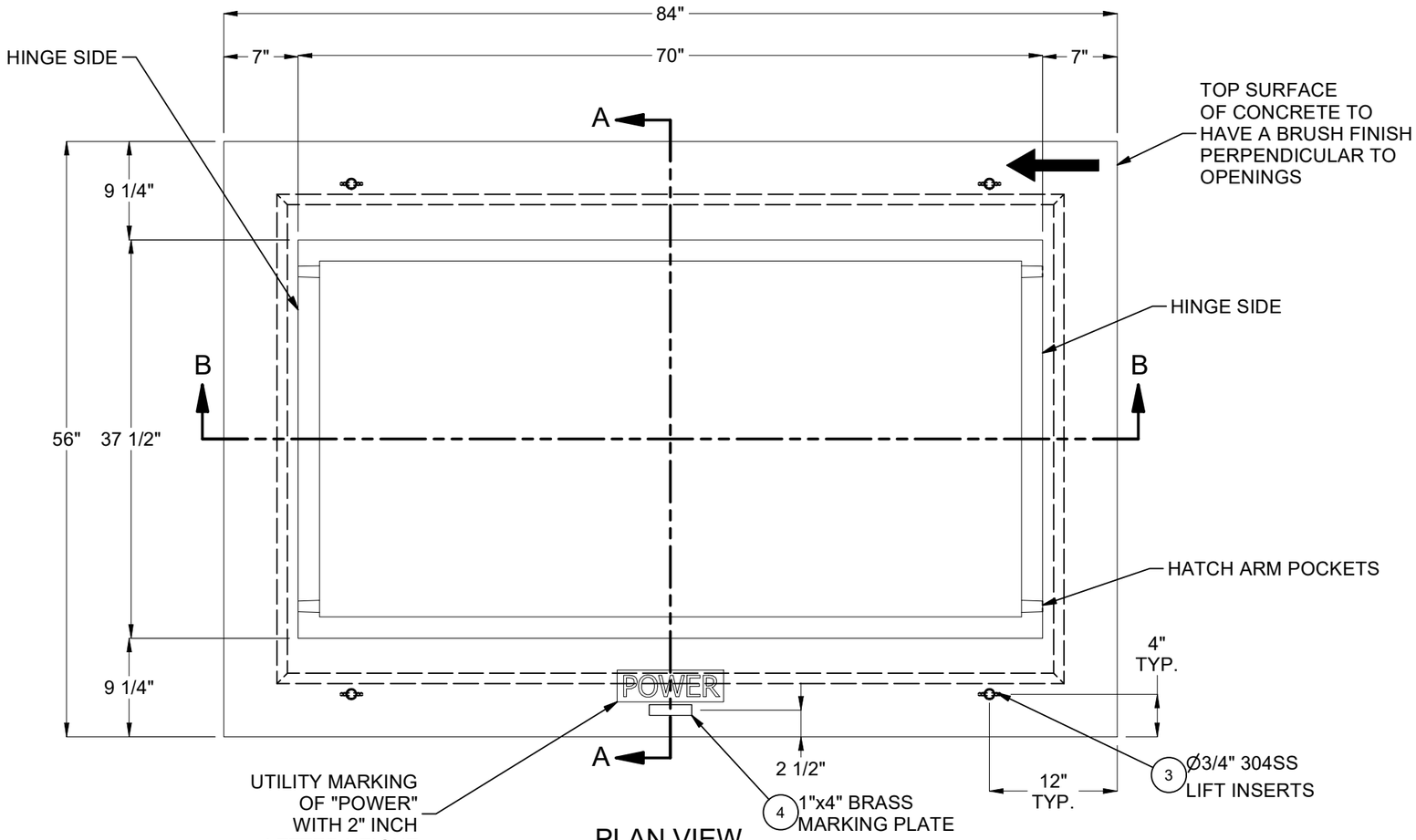

PLAN VIEW
(HATCH NOT SHOWN
FOR CLARITY)

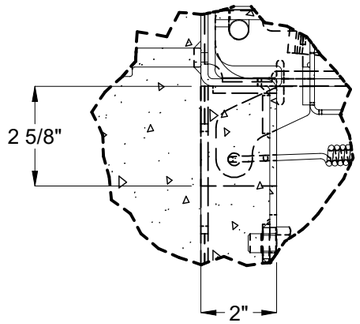

DETAIL A
(HATCH ARM POCKET)

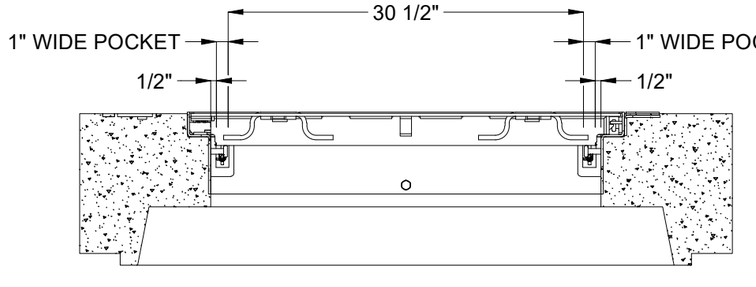

SECTION A-A
(SHOWING HATCH ARM POCKETS)

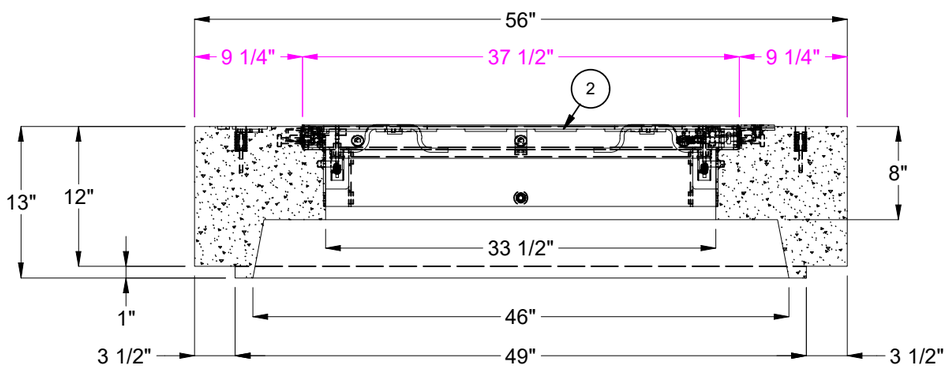

SECTION A-A

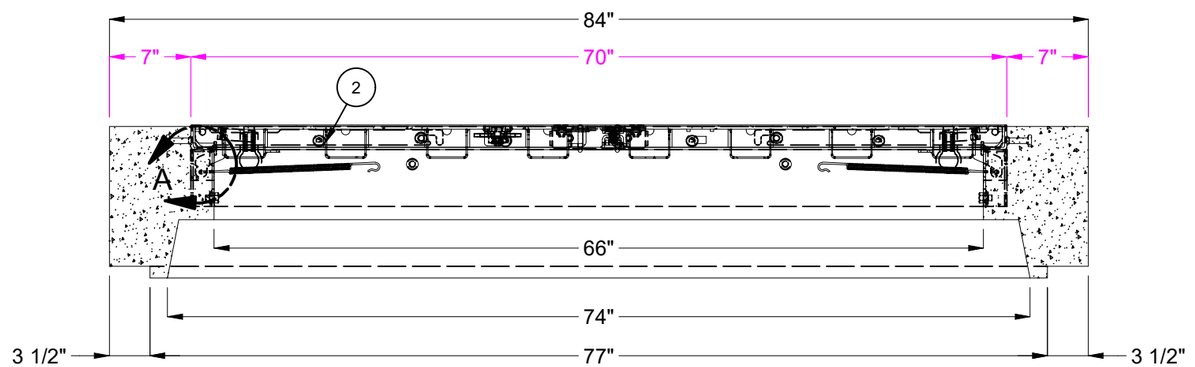

SECTION B-B

BURY DEPTH:	0.0' - 0.0' to Top		
WATER LEVEL:	5.0'	APPROX. WEIGHT:	2553.74 Lbs
DESIGN SPEC:	ACI 318,ASTM C857	LOADING SPEC:	A-16 (AASHTO HS20-44)
REINFORCEMENT TYPE:	Rebar	LIFTING TYPE:	Insert

JENSEN PRECAST EST. 1968

WWW.JENSENPRECAST.COM

©2024 Jensen Precast- All rights reserved.
All materials appearing as Jensen Precast documents and the like are proprietary work product and are protected under U.S. copyright and other laws.
Unless in conjunction with business conducted with Jensen Precast, any use of Jensen Precast work product without express, written consent is prohibited, and recipient is prohibited from distributing any and all work product to non-approved third parties under penalty of civil action.

DESCRIPTION:	Vault 4878x13 Slab Top 36"x72"C SnoPUD CASTING DRAWING		REV: B-1
PART NUMBER:	200057411	DRAWN BY:	E.Fine
CREATED:	10/14/2021	MODIFIED:	1/24/2024
			SHEET: 2 OF 2

200057411.idw