NOTES
■ FOR COMPLETE DESIGN AND PRODUCT INFORMATION CONTACT JENSEN PRECAST.

BILL OF MATERIALS

ITEM	ITEM QTY	QTY	PART NUMBER	DESCRIPTION
1	1	19.948 ft^3	100011429	CONCRETE MIX GENERIC 7000 PSI
2	4	144.0000 in	100009575	STRUT C-CHANNEL 1-5/8 X 1-5/8 12GA SLOTTED 304SS
3	4	4	100037074	PULL IRON .5DIA 6 OH X 3W GALV XXX VALLEY NUTBOLT
4	4	4	100034833	ANCHOR RAPID LIFT TECH 2.5T CLUTCH 2.4375IN LONG MB RL-25
5	1	1	300128638	REINFORCING MAT 300128638
6	1	1	300153793	REINFORCING MAT 300153793

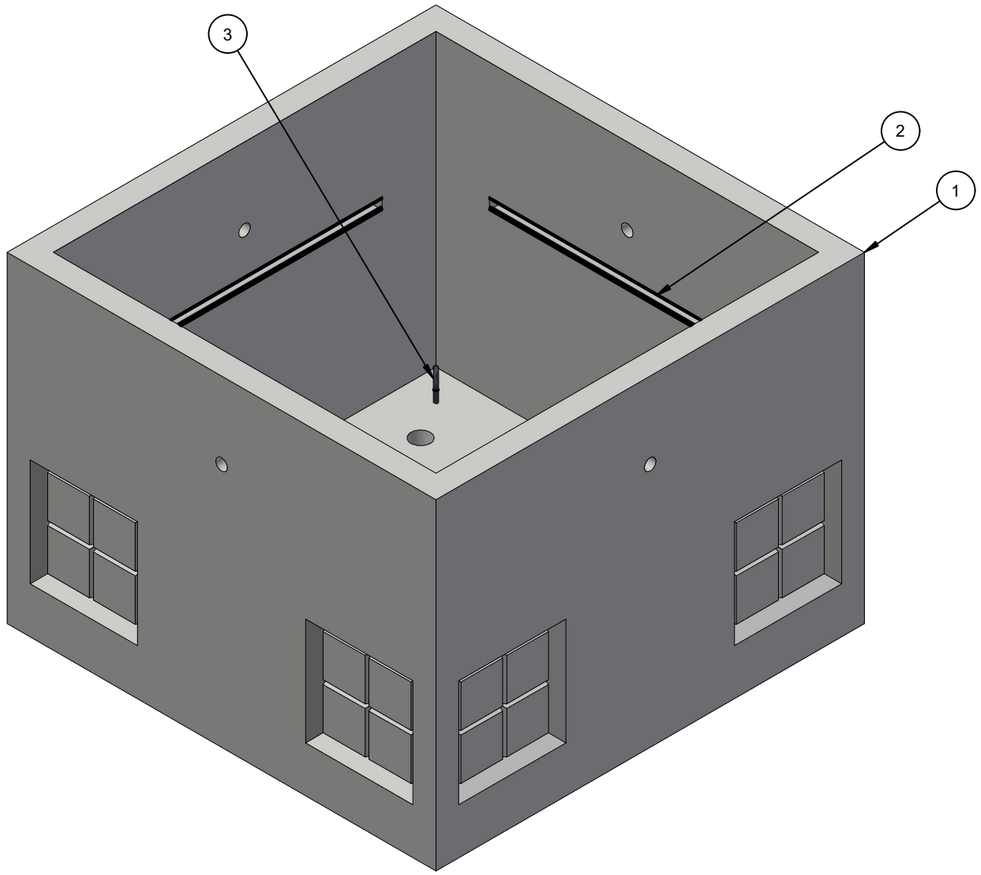

ISO LAYOUT

LIFTING NOTES
■ DEMOLDING: THIS CONCRETE PRODUCT IS DESIGNED TO BE LIFTED AT 3000 PSI WITH 4 LIFT CONNECTIONS EQUALLY LOADED TO 2 LIFTING POINTS AT A MINIMUM 60° SLING ANGLE, MEASURED FROM HORIZONTAL.
■ INSTALLATION: THIS CONCRETE PRODUCT IS DESIGNED TO BE LIFTED AT 3000 PSI WITH 4 LIFT CONNECTIONS EQUALLY LOADED TO 2 LIFTING POINTS AT A MINIMUM 60° SLING ANGLE, MEASURED FROM HORIZONTAL.

BURY DEPTH:	0.5' - 0.5' to Top		
WATER LEVEL:	5.0'	APPROX. WEIGHT:	3033.4 Lbs
DESIGN SPEC:	ACI 318,ASTM C857	LOADING SPEC:	A-16 (AASHTO HS20-44)
REINFORCEMENT TYPE:	Rebar	LIFTING TYPE:	Tech Erection Anchor

JENSEN PRECAST EST. 1968

WWW.JENSENPRECAST.COM

©2023 Jensen Precast- All rights reserved.
All materials appearing as Jensen Precast documents and the like are proprietary work product and are protected under U.S. copyright and other laws.
Unless in conjunction with business conducted with Jensen Precast, any use of Jensen Precast work product without express, written consent is prohibited, and recipient is prohibited from distributing any and all work product to non-approved third parties under penalty of civil action.

REVISION HISTORY			
REV	DESCRIPTION	DATE	BY
A	DRAWING CREATED	2/25/22	T.Larson
B	PROPERTIES UPDATED	10/3/2023	E.Fine

DESCRIPTION: Vault 5050x38 Rect. Bottom Section Knockout Sump SnoPUD 1001722 CASTING LAYOUT				REV: B-3
PART NUMBER:	200056844	DRAWN BY:	E.Fine	SHEET: 1 OF 2
CREATED:	4/10/2020	MODIFIED:	11/16/2023	

200056844.idw

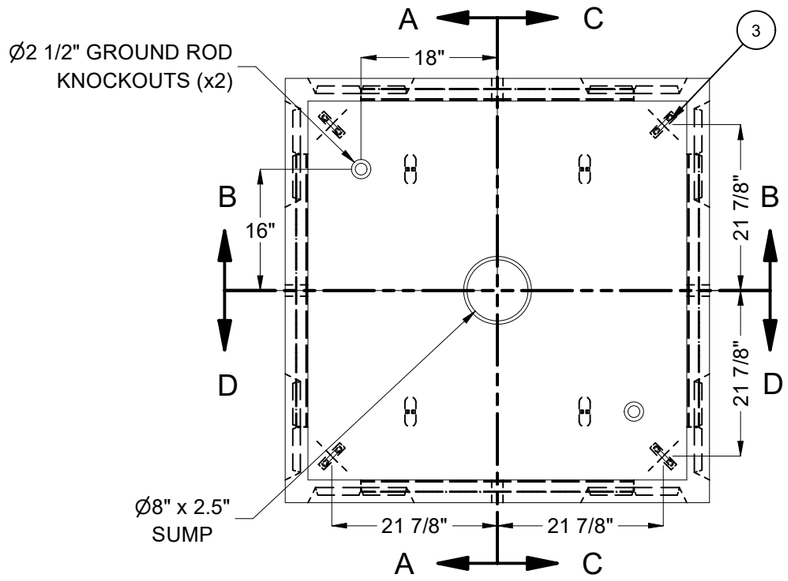

PLAN VIEW

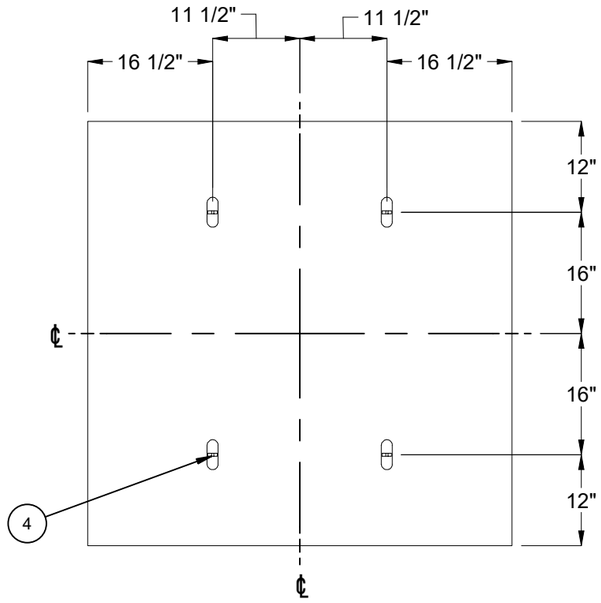

PLAN VIEW
(SHOWING DEMOLDING LIFTERS)

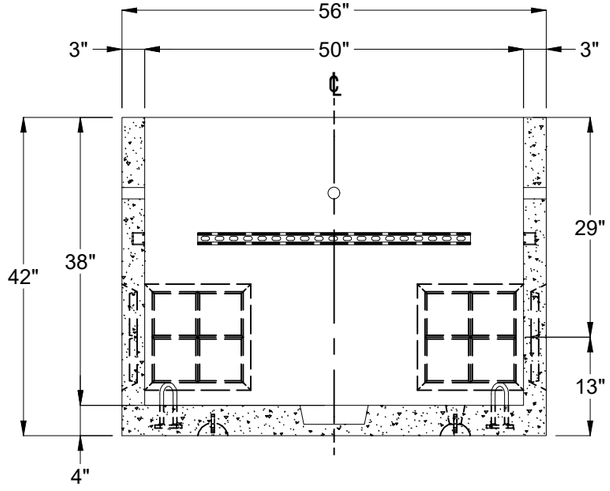

SECTION A-A

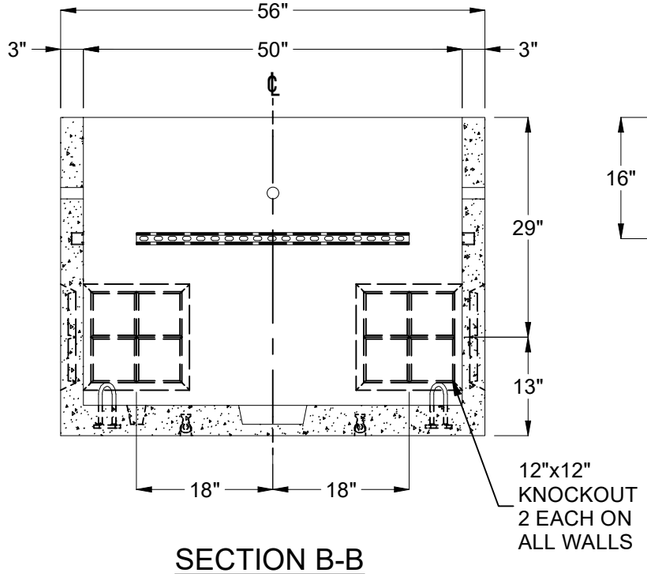

SECTION B-B

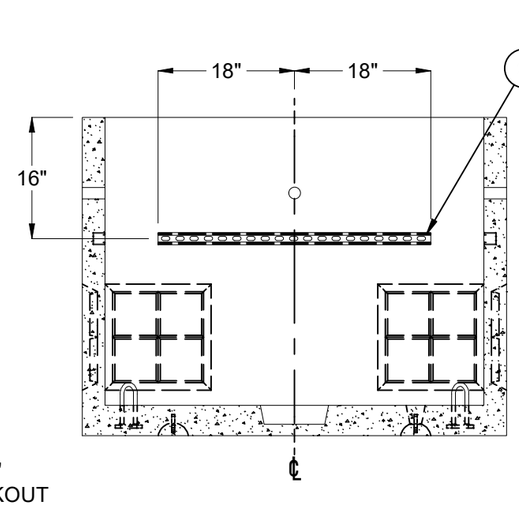

SECTION C-C

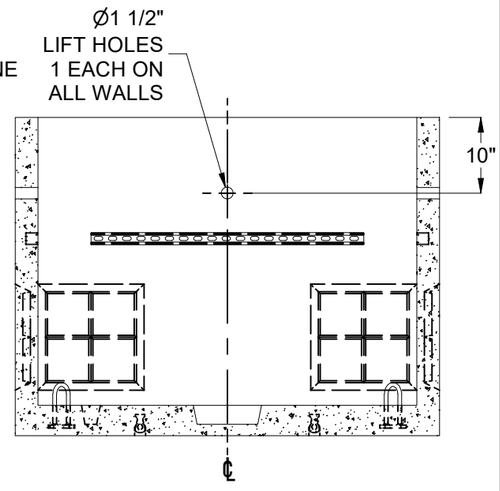

SECTION D-D

BURY DEPTH:	0.5' - 0.5' to Top		
WATER LEVEL:	5.0'	APPROX. WEIGHT:	3033.4 Lbs
DESIGN SPEC:	ACI 318,ASTM C857	LOADING SPEC:	A-16 (AASHTO HS20-44)
REINFORCEMENT TYPE:	Rebar	LIFTING TYPE:	Tech Erection Anchor

JENSEN PRECAST EST. 1968

WWW.JENSENPRECAST.COM

©2023 Jensen Precast- All rights reserved.
All materials appearing as Jensen Precast documents and the like are proprietary work product and are protected under U.S. copyright and other laws.
Unless in conjunction with business conducted with Jensen Precast, any use of Jensen Precast work product without express, written consent is prohibited, and recipient is prohibited from distributing any and all work product to non-approved third parties under penalty of civil action.

DESCRIPTION:	Vault 5050x38 Rect. Bottom Section Knockout Sump SnoPUD 1001722		REV: B-3
	CASTING DRAWING		SHEET: 2 OF 2
PART NUMBER:	200056844	DRAWN BY:	E.Fine
CREATED:	4/10/2020	MODIFIED:	11/16/2023

200056844.idw